Optoma

# DLP® Projector

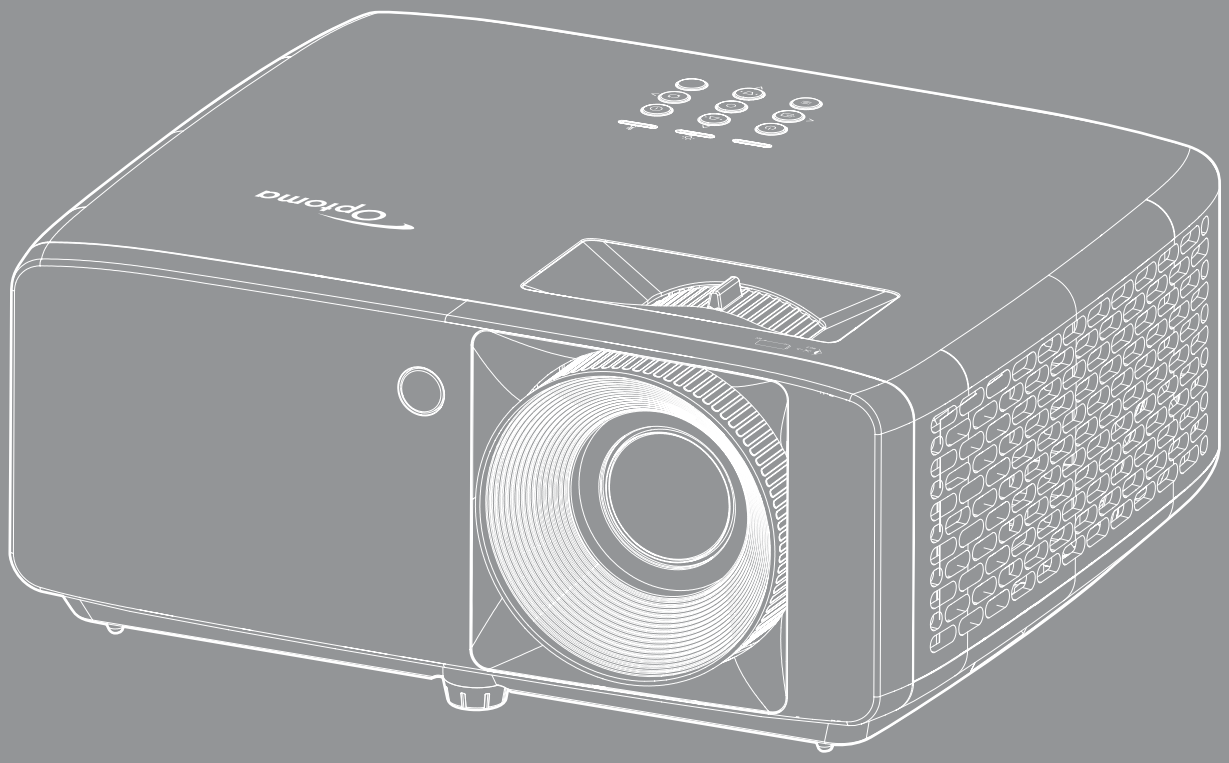

User manual

HDMI DLP TEXAS INSTRUMENTS 3D Full

# TABLE OF CONTENTS


## SAFETY ..... 4

*Important Safety Instruction* ..... 4
*Laser Radiation Safety Information* ..... 5
*Copyright* ..... 7
*Disclaimer* ..... 7
*Trademark Recognition* ..... 7
*FCC* ..... 7
*Declaration of Conformity for EU countries* ..... 8
*WEEE* ..... 8
*Cleaning the Lens* ..... 8

## INTRODUCTION ..... 9

*Package Overview* ..... 9
*Standard accessories* ..... 9
*Product Overview* ..... 10
*Connections* ..... 11
*Keypad* ..... 12
*Remote control* ..... 13

## SETUP AND INSTALLATION ..... 14

*Installing the projector* ..... 14
*Connecting sources to the projector* ..... 16
*Adjusting the projector image* ..... 17
*Remote setup* ..... 18

## USING THE PROJECTOR ..... 20

*Powering on / off the projector* ..... 20
*Selecting an input source* ..... 21
*Menu navigation and features* ..... 22
*OSD Menu tree* ..... 23
*Image picture mode menu* ..... 28
*Image dynamic range menu* ..... 28
*Image brightness menu* ..... 28
*Image contrast menu* ..... 29
*Image sharpness menu* ..... 29
*Image gamma menu* ..... 29
*Image color settings menu* ..... 29
*Image wall color menu* ..... 29
*Image 3D menu* ..... 30
*Image reset menu* ..... 30
*Display projection orientation menu* ..... 31
*Display light source mode menu* ..... 31
*Display dynamic black menu* ..... 31

*Display gaming mode menu* ..... *31*
*Display screen type menu* ..... *31*
*Display aspect ratio menu* ..... *32*
*Display geometric correction menu* ..... *35*
*Display digital zoom menu* ..... *35*
*Display image shift menu* ..... *35*
*Display reset menu* ..... *35*
*Setup test pattern menu* ..... *36*
*Setup language menu* ..... *36*
*Setup menu settings menu* ..... *36*
*Setup high altitude menu* ..... *36*
*Setup power settings menu* ..... *36*
*Setup security menu* ..... *37*
*Setup startup logo menu* ..... *37*
*Setup background color menu* ..... *37*
*Setup device reset menu* ..... *37*
*Input auto source menu* ..... *38*
*Input auto input switch menu* ..... *38*
*Input HDMI CEC settings menu* ..... *38*
*Input reset menu* ..... *38*
*Audio volume menu* ..... *39*
*Audio mute menu* ..... *39*
*Audio internal speaker menu* ..... *39*
*Audio audio output menu* ..... *39*
*Audio reset menu* ..... *39*
*Control device ID menu* ..... *40*
*Control remote settings menu* ..... *40*
*Control keypad settings menu* ..... *40*
*Control reset menu* ..... *40*
*Information menu* ..... *41*

**ADDITIONAL INFORMATION ..... 42**

*Compatible resolutions* ..... *42*
*Image size and projection distance* ..... *46*
*Projector dimensions and ceiling mount installation* ..... *48*
*IR remote control codes* ..... *50*
*Troubleshooting* ..... *52*
*Warning indicators* ..... *54*
*Specifications* ..... *55*
*Optoma global offices* ..... *56*

# SAFETY

| | |
|---|---|
| | The lightning flash with arrow head within an equilateral triangle is intended to alert the user to the presence of uninsulated "dangerous voltage" within the product's enclosure that may be of sufficient magnitude to constitute a risk of electric shock to persons. |
| | The exclamation point within an equilateral triangle is intended to alert the user to the presence of important operating and maintenance (servicing) instructions in the literature accompanying the appliance. |

Please follow all warnings, precautions and maintenance as recommended in this user's guide.

## Important Safety Instruction

- Do not block any ventilation openings. To ensure reliable operation of the projector and to protect from over heating, it is recommended to install the projector in a location that does not block ventilation. As an example, do not place the projector on a crowded coffee table, sofa, bed, etc. Do not put the projector in an enclosure such as a book case or a cabinet that restricts air flow.
- To reduce the risk of fire and/or electric shock, do not expose the projector to rain or moisture. Do not install near heat sources such as radiators, heaters, stoves or any other apparatus such as amplifiers that emits heat.
- Do not let objects or liquids enter the projector. They may touch dangerous voltage points and short out parts that could result in fire or electric shock.
- Do not use under the following conditions:
  - In extremely hot, cold or humid environments.
    - (i) Ensure that the ambient room temperature is within 5°C ~ 40°C
    - (ii) Relative humidity is 10% ~ 85%
  - In areas susceptible to excessive dust and dirt.
  - Near any appliance generating a strong magnetic field.
  - In direct sunlight.
- Do not use the unit if it has been physically damaged or abused. Physical damage/abuse would be (but not limited to):
  - Unit has been dropped.
  - Power supply cord or plug has been damaged.
  - Liquid has been spilled on to the projector.
  - Projector has been exposed to rain or moisture.
  - Something has fallen in the projector or something is loose inside.
- Do not place the projector on an unstable surface. The projector may fall over resulting in injury or the projector may become damaged.
- Do not block the light coming out of the projector lens when in operation. The light will heat the object and may melt, cause burns or start a fire.
- Please do not open or disassemble the projector as this may cause electric shock.
- Do not attempt to service the unit yourself. Opening or removing covers may expose you to dangerous voltages or other hazards. Please call Optoma before you send the unit for repair.
- See projector enclosure for safety related markings.
- The unit should only be repaired by authorized service personnel.
- Only use attachments/accessories specified by the manufacturer.
- Do not look into straight into the projector lens during operation. The bright light may harm your eyes.
- This projector will detect the life of the light source itself.

- When switching the projector off, please ensure the cooling cycle has been completed before disconnecting power. Allow 90 seconds for the projector to cool down.
- Turn off and unplug the power plug from the AC outlet before cleaning the product.
- Use a soft dry cloth with mild detergent to clean the display housing. Do not use abrasive cleaners, waxes or solvents to clean the unit.
- Disconnect the power plug from AC outlet if the product is not being used for a long period of time.
- Do not setup the projector in places where it might be subjected to vibration or shock.
- Do not touch the lens with bare hands.
- Remove battery/batteries from remote control before storage. If the battery/batteries are left in the remote for long periods, they may leak.
- Do not use or store the projector in places where smoke from oil or cigarettes may be present, as it can adversely affect the quality of the projector performance.
- Please follow the correct projector orientation installation as non standard installation may affect the projector performance.
- Use a power strip and or surge protector. As power outages and brown-outs can KILL devices.

## Laser Radiation Safety Information

- This product is classified as CLASS 1 LASER PRODUCT - RISK GROUP 2 of IEC60825-1 : 2014 and also complies with 21 CFR 1040.10 and 1040.11 as a Risk Group 2, LIP (Laser Illuminated Projector) as defined in IEC 62471:5:Ed. 1.0. For more information see Laser Notice No. 57, dated May 8, 2019.

- As with any bright source, do not stare into the direct beam, RG2 IEC 62471-5:2015.
- This projector is class 1 laser product of IEC/EN 60825-1:2014 and risk group 2 with the requirements of IEC 62471-5:2015.
- Additional instructions to supervise children, no staring, and not use optical aids.
- Notice is given to supervise children and to never allow them to stare into the projector beam at any distance from the projector.
- Notice is given to use caution when using the remote control for starting the projector while in front of the projection lens.
- Notice is given to the user to avoid the use of optical aids such as binoculars or telescopes inside the beam.

- When turning on the projector, make sure no one within projection range is looking at the lens.
- Keep any items (magnifying glass etc.) out of the light path of the projector. The light path being projected from the lens is extensive, therefore any kind of abnormal objects that can redirect light coming out of the lens, can cause an unpredictable outcome such as a fire or injury to the eyes.
- Any operation or adjustment not specifically instructed by the user's guide creates the risk of hazardous laser radiation exposure.
- Do not open or disassemble the projector as this may cause damage by the exposure of laser radiation.
- Do not stare into beam when the projector is on. The bright light may result in permanent eye damage.

Without following the control, adjustment or operation procedure may cause damage by the exposure of laser radiation

## Copyright

This publication, including all photographs, illustrations and software, is protected under international copyright laws, with all rights reserved. Neither this manual, nor any of the material contained herein, may be reproduced without written consent of the author.

© Copyright 2022

## Disclaimer

The information in this document is subject to change without notice. The manufacturer makes no representations or warranties with respect to the contents hereof and specifically disclaims any implied warranties of merchantability or fitness for any particular purpose. The manufacturer reserves the right to revise this publication and to make changes from time to time in the content hereof without obligation of the manufacturer to notify any person of such revision or changes.

## Trademark Recognition

Kensington is a U.S. registered trademark of ACCO Brand Corporation with issued registrations and pending applications in other countries throughout the world.

HDMI, the HDMI Logo, and High-Definition Multimedia Interface are trademarks or registered trademarks of HDMI Licensing LLC in the United States and other countries.

DLP®, DLP Link and the DLP logo are registered trademarks of Texas Instruments and BrilliantColor™ is a trademark of Texas Instruments.

All other product names used in this manual are the properties of their respective owners and are Acknowledged.

## FCC

This device has been tested and found to comply with the limits for a Class B digital device pursuant to Part 15 of the FCC rules. These limits are designed to provide reasonable protection against harmful interference in a residential installation. This device generates, uses and can radiate radio frequency energy and, if not installed and used in accordance with the instructions, may cause harmful interference to radio communications.

However, there is no guarantee that interference will not occur in a particular installation. If this device does cause harmful interference to radio or television reception, which can be determined by turning the device off and on is encouraged to try to correct the interference by one or more of the following measures:

- Reorient or relocate the receiving antenna.
- Increase the separation between the device and receiver.
- Connect the device into an outlet on a circuit different from that to which the receiver is connected.
- Consult the dealer or an experienced radio/television technician for help.

### Notice: Shielded cables

All connections to other computing devices must be made using shielded cables to maintain compliance with FCC regulations.

### Caution

Changes or modifications not expressly approved by the manufacturer could void the user's authority, which is granted by the Federal Communications Commission, to operate this projector.

**Operation Conditions**

This device complies with Part 15 of the FCC Rules. Operation is subject to the following two conditions:

1. This device may not cause harmful interference and

2. This device must accept any interference received, including interference that may cause undesired operation.

**Notice: Canadian users**

This Class B digital apparatus complies with Canadian ICES-003.

Remarque à l'intention des utilisateurs canadiens

Cet appareil numerique de la classe B est conforme a la norme NMB-003 du Canada.

## Declaration of Conformity for EU countries

- EMC Directive 2014/30/EU (including amendments)
- Low Voltage Directive 2014/35/EU
- RED 2014/53/EU (if product has RF function)

## WEEE

**Disposal instructions**

Do not throw this electronic device into the trash when discarding. To minimize pollution and ensure utmost protection of the global environment, please recycle it.

## Cleaning the Lens

- Before cleaning the lens, be sure to turn off the projector and unplug the power cord to allow it to completely cool down.
- Use a compressed air tank to remove the dust.

Use a special cloth for cleaning lens and gently wipe the lens. Do not touch the lens with your fingers.

- Do not use alkaline/acid detergents or volatile solvents such as alcohol for cleaning lens. If the lens is damaged due to the cleaning process, it is not covered by the warranty.

Warning: Do not use a spray containing flammable gases to remove dust or dirt from the lens. This may cause a fire due to excessive heat inside the projector.

Warning: Do not clean the lens if the projector is warming up as this may cause the lens' surface film to peel off.

Warning: Do not wipe or tap the lens with a hard object.

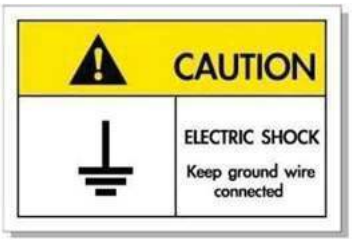


To avoid electric shock, the unit and its peripherals must be properly grounded (earthed).

# INTRODUCTION

Thank you for purchasing an Optoma laser projector. For full list of features please visit the product page on our website, where you will also find additional information and documentation such as FAQs.

## Package Overview

Carefully unpack and verify that you have the items listed below under standard accessories. Some of the items under optional accessories may not be available depending on the model, specification and your region of purchase. Please check with your place of purchase. Some accessories may vary from region to region.

The warranty card is only supplied in some specific regions. Please consult your dealer for detailed information.

## Standard accessories

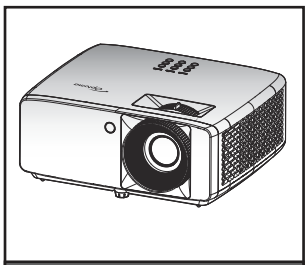

Projector

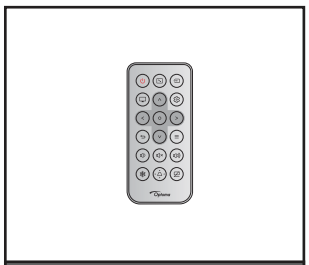

Remote control

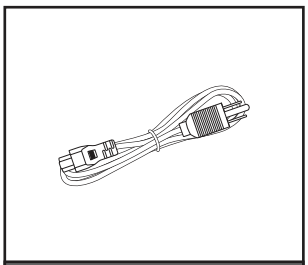

Power cable

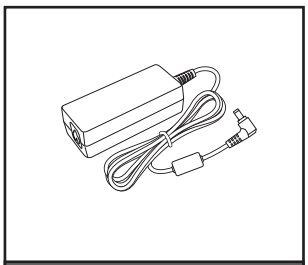

Power adapter

- ☑ Warranty Card*
- ☑ Quick start user manual

Documentation

**Note:**

- *The remote control is shipped with batteries.*
- **For warranty Information, please visit https://www.optoma.com/support/download*
- *For access to the setup information, user manual, warranty information, and product updates – please scan the QR Code or visit the following URL: https://www.optoma.com/support/download*

# INTRODUCTION

## Product Overview

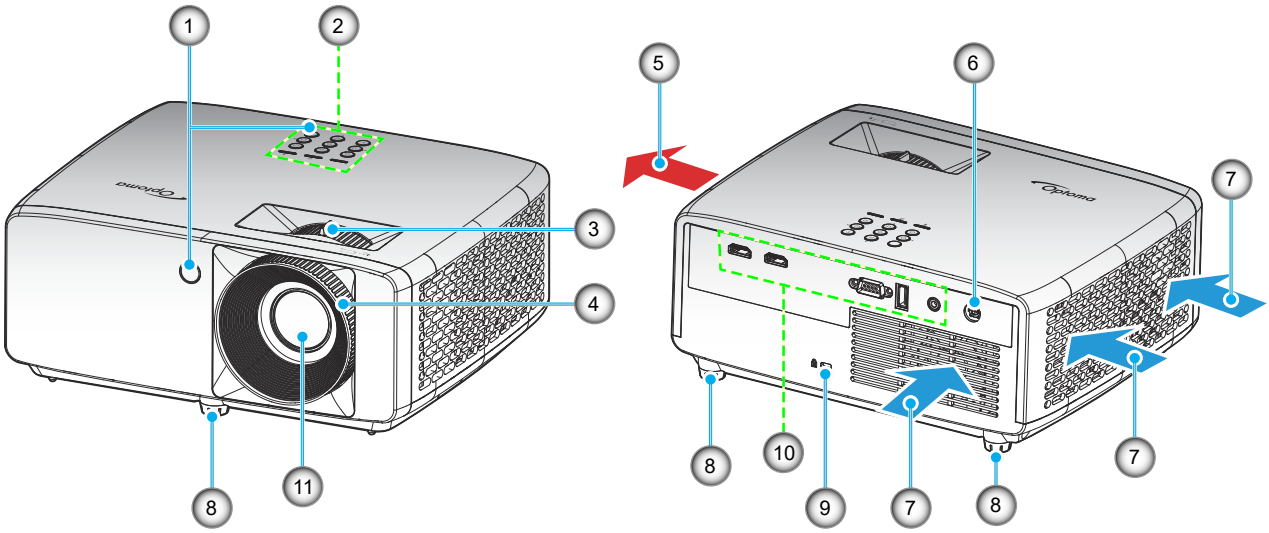


**Note:**

- *Do not block projector intake and exhaust vents.*
- *When operating the projector in an enclosed space, allow at least 30 cm clearance around the intake and exhaust vents.*

| No | Item | No | Item |
|---|---|---|---|
| 1. | IR Receivers | 7. | Ventilation (outlet) |
| 2. | Keypad | 8. | Tilt-Adjustment Feet |
| 3. | Zoom Lever | 9. | Kensington™ Lock Port |
| 4. | Focus Ring | 10. | Input / Output |
| 5. | Ventilation (inlet) | 11. | Lens |
| 6. | DC Jack | | |

# INTRODUCTION

## Connections

### XGA/WXGA model

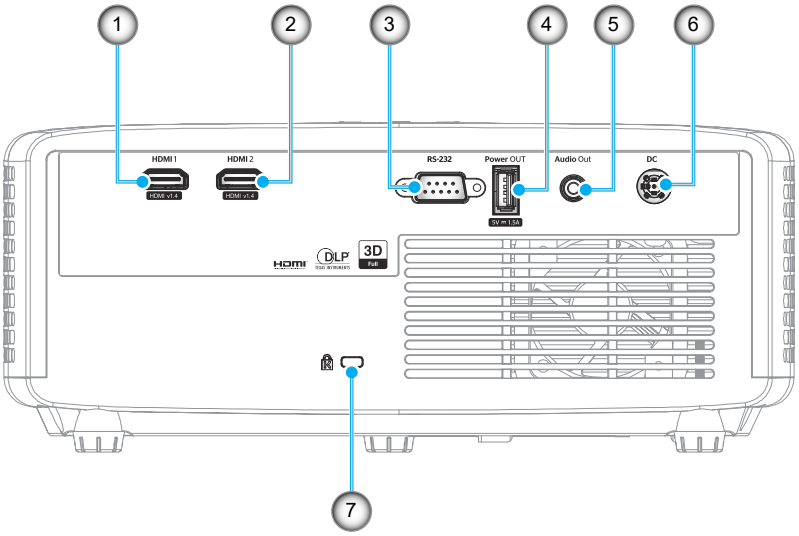


### 1080p model

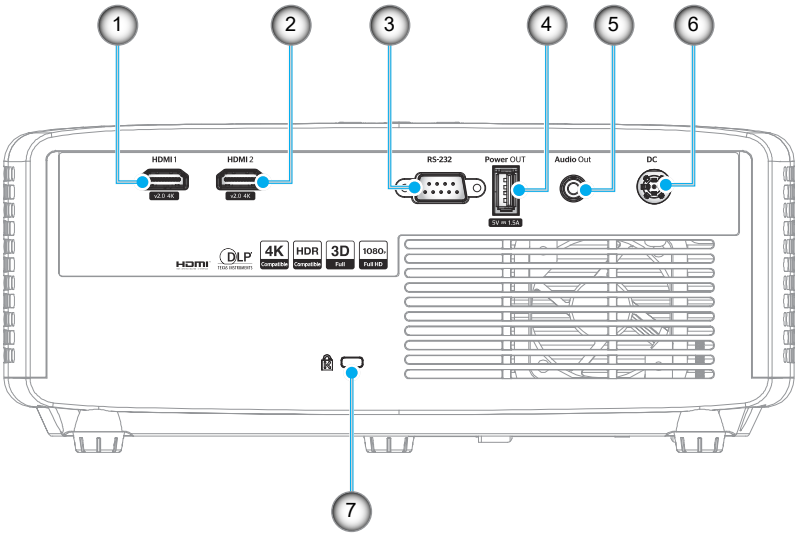


| No | Item | No | Item |
|---|---|---|---|
| 1. | HDMI 1 Connector | 5. | Audio Out Connector |
| 2. | HDMI 2 Connector | 6. | DC Jack |
| 3. | RS-232 Connector | 7. | Kensington™ Lock Port |
| 4. | USB Power Out (5V⎓1.5A) Connector | | |

**Note:** *Signal mode support varies from different model in each sales region.*

# INTRODUCTION

## Keypad

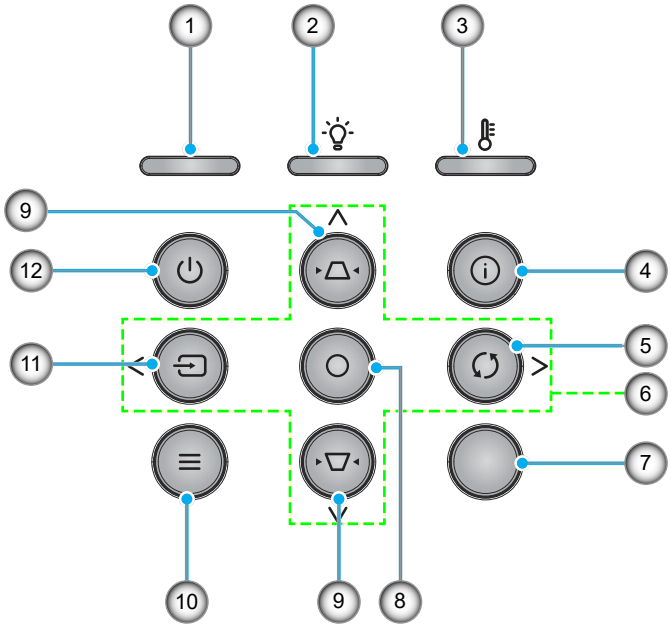


| No | Item | No | Item |
|---|---|---|---|
| 1. | Power LED | 7. | IR Receiver |
| 2. | Lamp LED | 8. | Enter |
| 3. | Temp LED | 9. | Keystone Correction |
| 4. | Information | 10. | Menu |
| 5. | Re-Sync | 11. | Source |
| 6. | Four Directional Select Keys | 12. | Power |

# INTRODUCTION

## Remote control

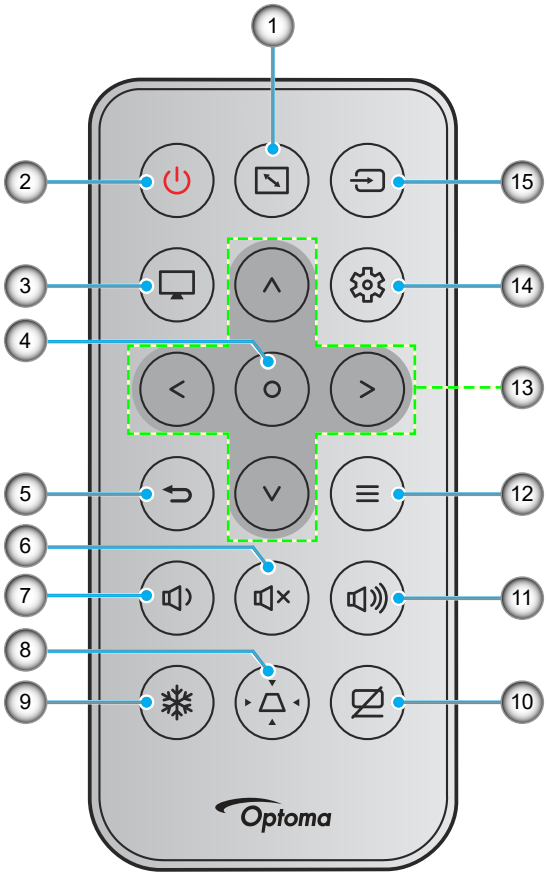


| No | Item | No | Item |
|---|---|---|---|
| 1. | Aspect Ratio | 9. | Freeze |
| 2. | Power On / Off | 10. | AV Mute |
| 3. | Mode | 11. | Volume + |
| 4. | Enter | 12. | Menu |
| 5. | Return | 13. | Four Directional Select Keys |
| 6. | Mute | 14. | Settings/Setup Menu |
| 7. | Volume - | 15. | Source |
| 8. | Keystone Correction | | |

**Note:**

- *Some keys may have no function for models that do not support these features.*
- *Before using the remote control for the first time, remove the transparent insulation tape. See page 18 for battery installation.*

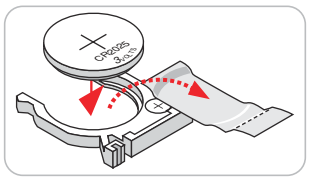

# SETUP AND INSTALLATION

## Installing the projector

Your projector is designed to be installed in one of four possible positions.

Your room layout or personal preference will dictate which installation location you select. Take into consideration the size and position of your screen, the location of a suitable power outlet, as well as the location and distance between the projector and the rest of your equipment.

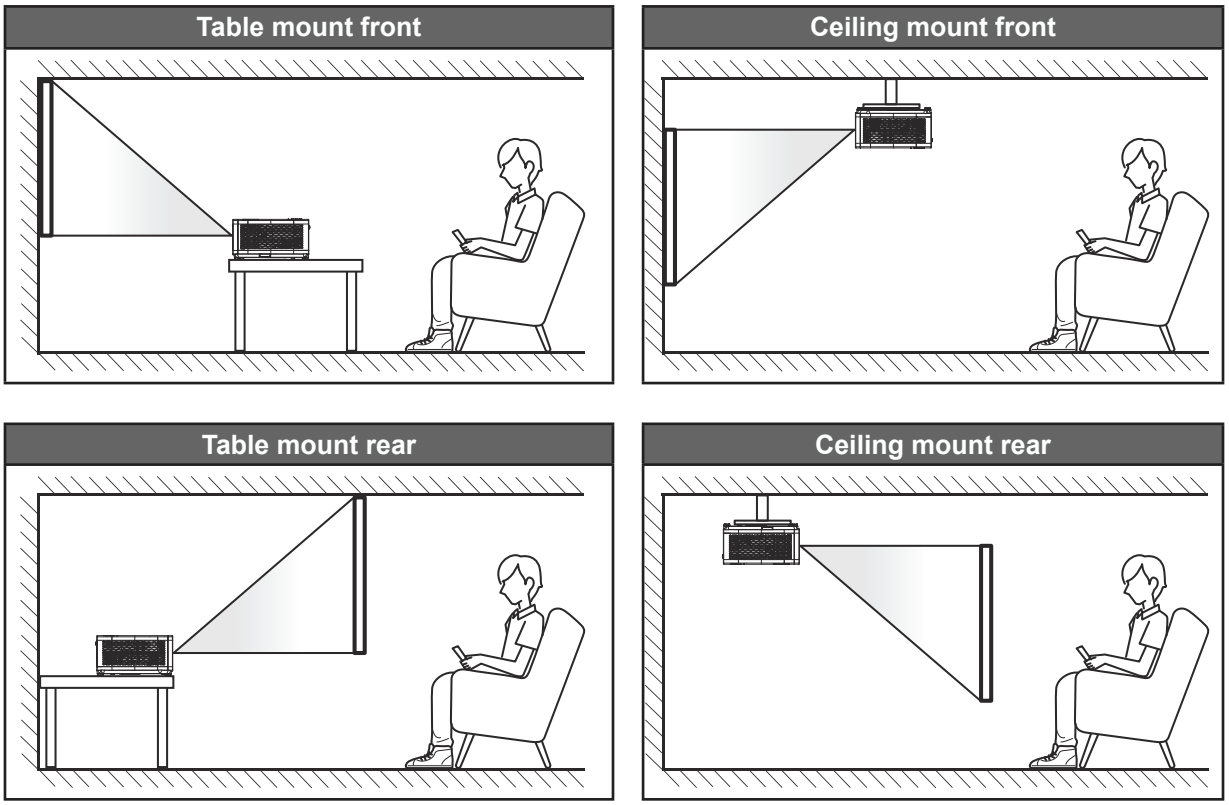


Projector should be placed flat on a surface and 90 degrees / perpendicular to the screen.

- How to determine projector location for a given screen size, please refer to distance table on pages *46~47*.
- How to determine screen size for a given distance, please refer to distance table on pages *46~47*.

**Note:** *The further away the projector is placed from the screen the projected image size increases and vertical offset also increases proportionally.*

# SETUP AND INSTALLATION

**Projector installation notice**

- 360° free orientation operation

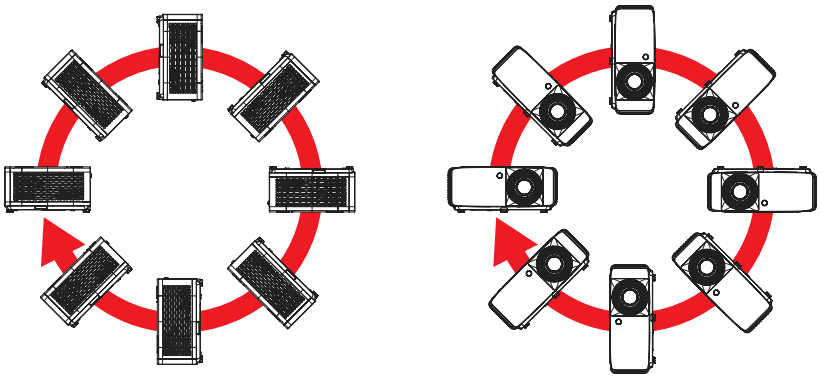

- Allow at least 30 cm clearance around the exhaust vent.

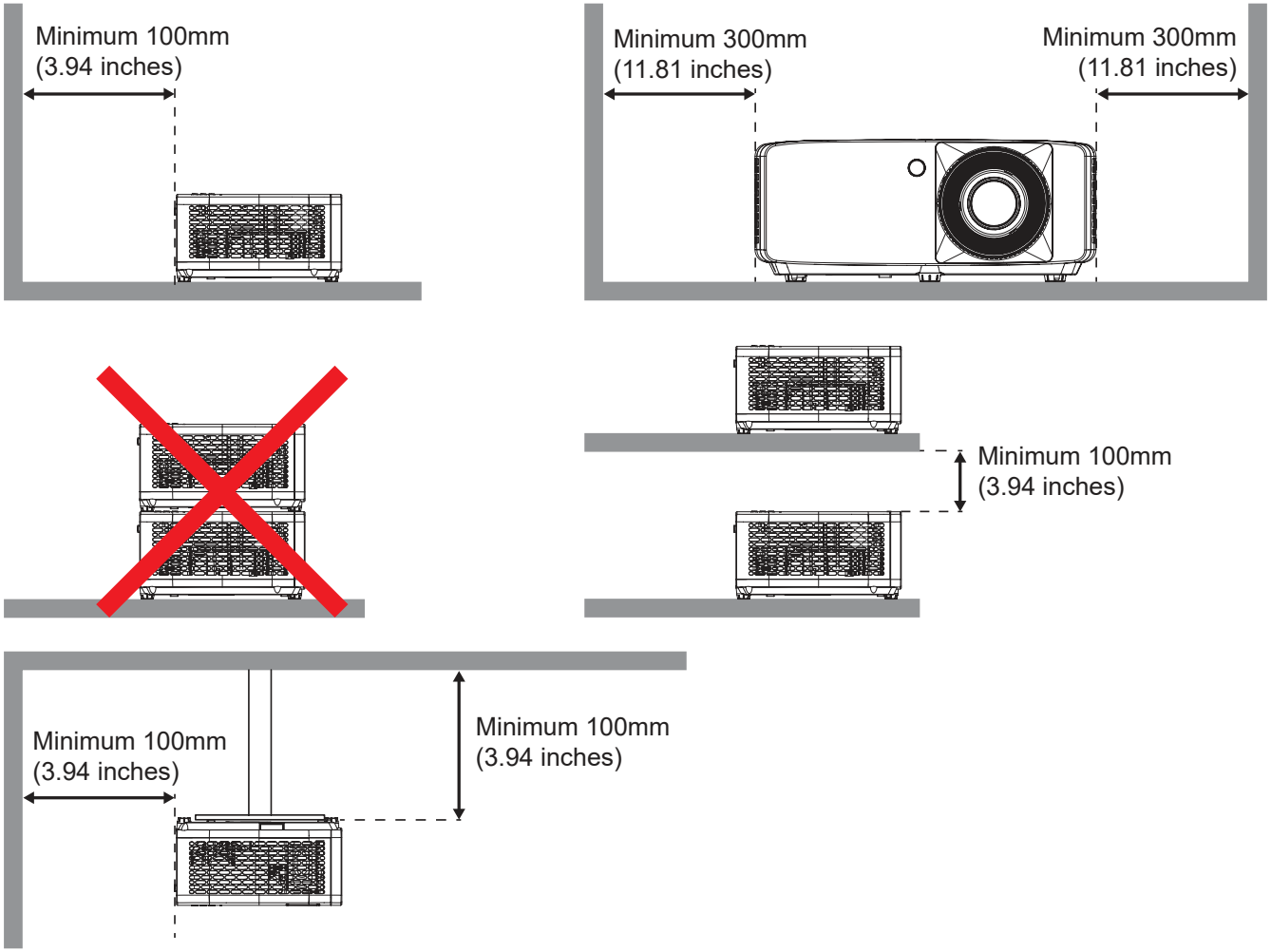


- Ensure that the intake vents do not recycle hot air from the exhaust vent.
- When operating the projector in an enclosed space, ensure that the surrounding air temperature within the enclosure does not exceed operation temperature while the projector is running, and the air intake and exhaust vents are unobstructed.
- All enclosures should pass a certified thermal evaluation to ensure that the projector does not recycle exhaust air, as this may cause the device to shutdown even if the enclosure temperature is with the acceptable operation temperature range.

# SETUP AND INSTALLATION

## Connecting sources to the projector

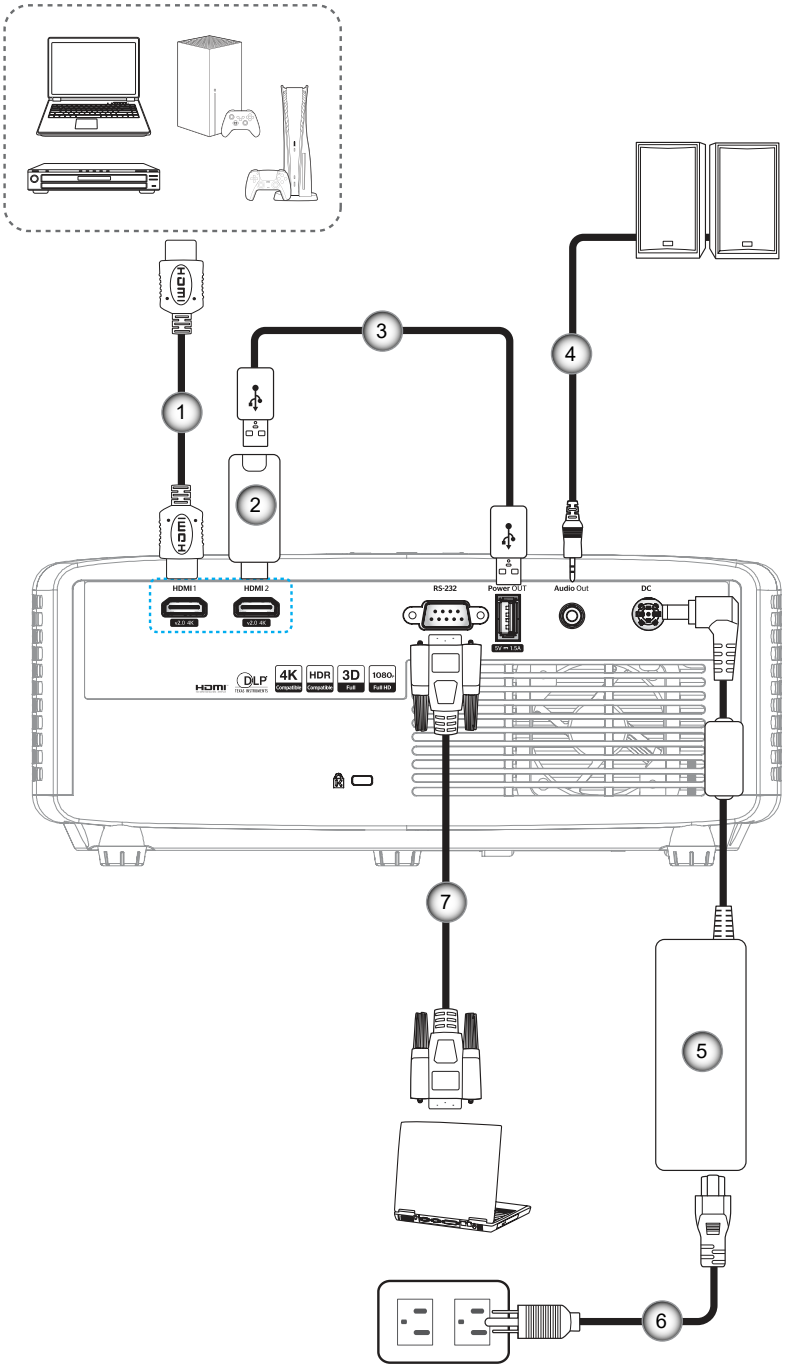


| No | Item | No | Item |
|---|---|---|---|
| 1. | HDMI Cable | 5. | Power Adapter |
| 2. | HDMI Dongle | 6. | Power Cable |
| 3. | USB Power Cable | 7. | RS232 Cable |
| 4. | Audio Out Cable | | |

**Note:** To ensure the best image quality and avoid connection errors, we recommend the use of High Speed or Premium Certified HDMI cables up to 5 meters.

# SETUP AND INSTALLATION

## Adjusting the projector image

### Image height

The projector is equipped with elevator feet for adjusting the image height.

1. Locate the adjustable foot you wish to adjust on the underside of the projector.
2. Rotate the adjustable foot clockwise or counterclockwise to raise or lower the projector.

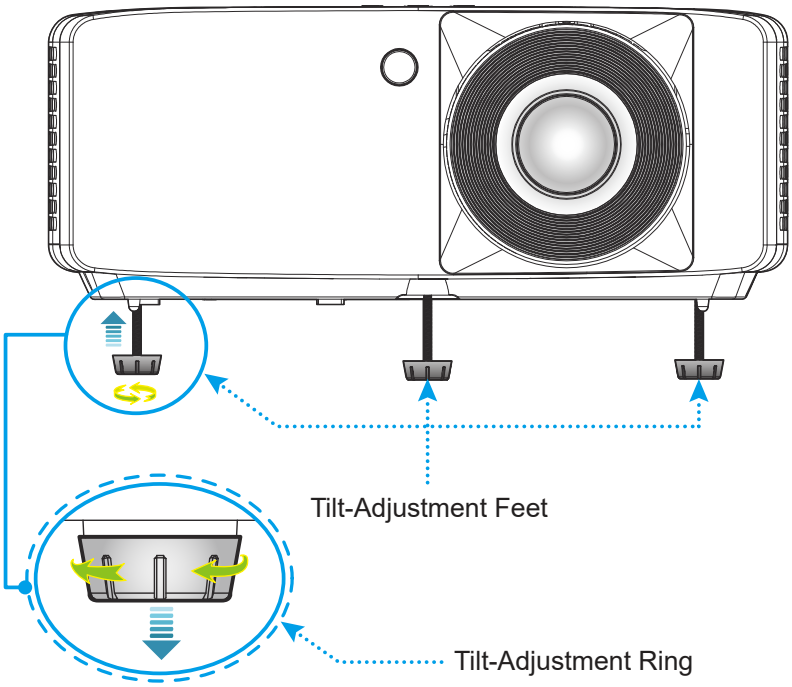


### Zoom and focus

- To adjust the image size, turn the zoom lever clockwise or counterclockwise to increase or decrease the projected image size.
- To adjust the focus, turn the focus ring clockwise or counterclockwise until the image is sharp and legible.

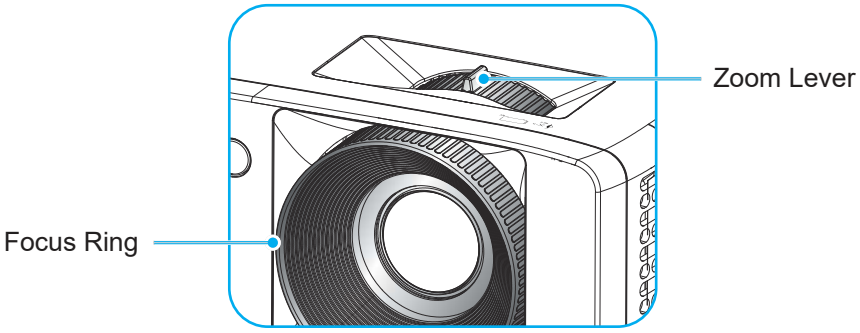

# SETUP AND INSTALLATION

## Remote setup

### Installing / replacing the batteries

1. Press firmly and slide the battery cover off.

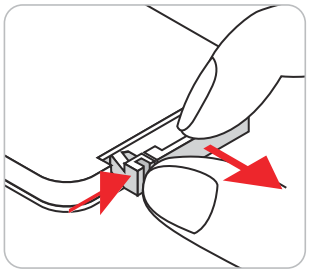

2. Install new battery into the compartment. Remove the old battery and install new one (CR2025). Ensure that the side with a “+” is facing up.

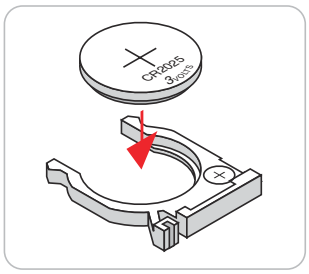


3. Put the cover back.

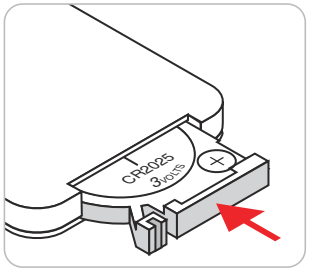


**CAUTION:** To ensure safe operation, please observe the following precautions:

- Use CR2025 type battery.
- Avoid contact with water or liquid.
- Do not expose the remote control to moisture or heat.
- Do not drop the remote control.
- If the battery has leaked in the remote control, carefully wipe the case clean and install new battery.
- Risk of an explosion if battery is replaced by an incorrect type.
- Dispose of used battery according to the instructions.

# SETUP AND INSTALLATION

**Effective range**

Infra-Red (IR) remote control sensor is located on the top and front sides of the projector. Ensure to hold the remote control at an angle within 30 degrees perpendicular to the projector's IR remote control sensor to function correctly. The distance between the remote control and the sensor should not be longer than 6 meters (19.7 feet).

- Make sure that there are no obstacles between the remote control and the IR sensor on the projector that might obstruct the infra-red beam.
- Make sure the IR transmitter of the remote control is not being shined by sunlight or fluorescent lamps directly.
- Please keep the remote controller away from fluorescent lamps for over 2 m or the remote controller might become malfunction.
- If the remote control is close to Inverter-Type fluorescent lamps, it might become ineffective from time to time.
- If the remote control and the projector are within a very short distance, the remote control might become ineffective.
- When you aim at the screen, the effective distance is less than 5 m from the remote control to the screen and reflecting the IR beams back to the projector. However, the effective range might change according to screens.

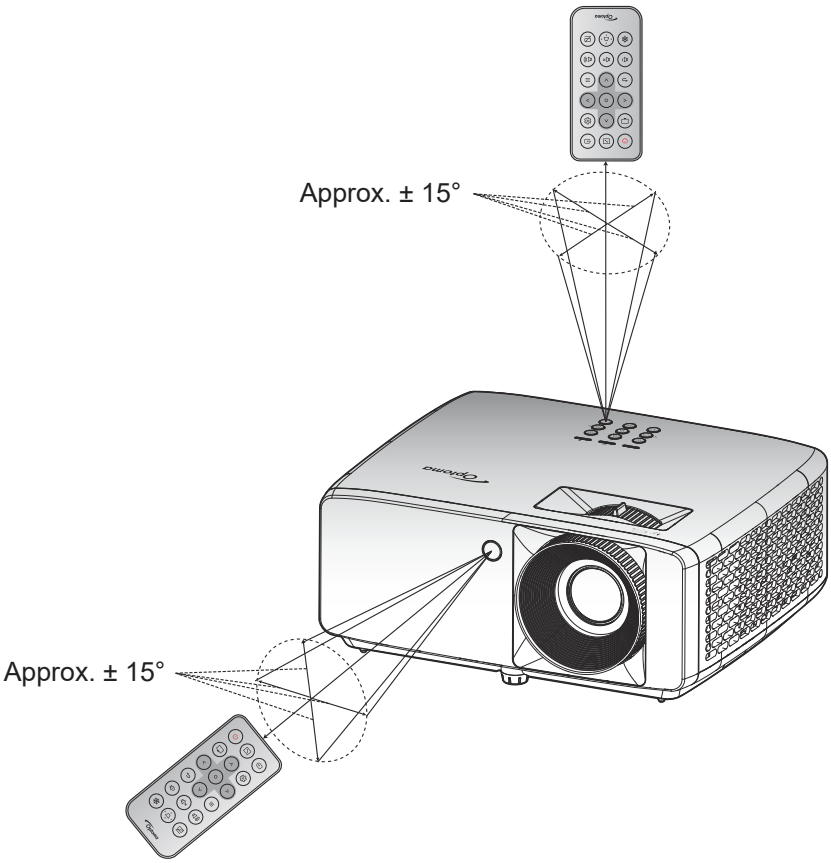

# USING THE PROJECTOR

## Powering on / off the projector

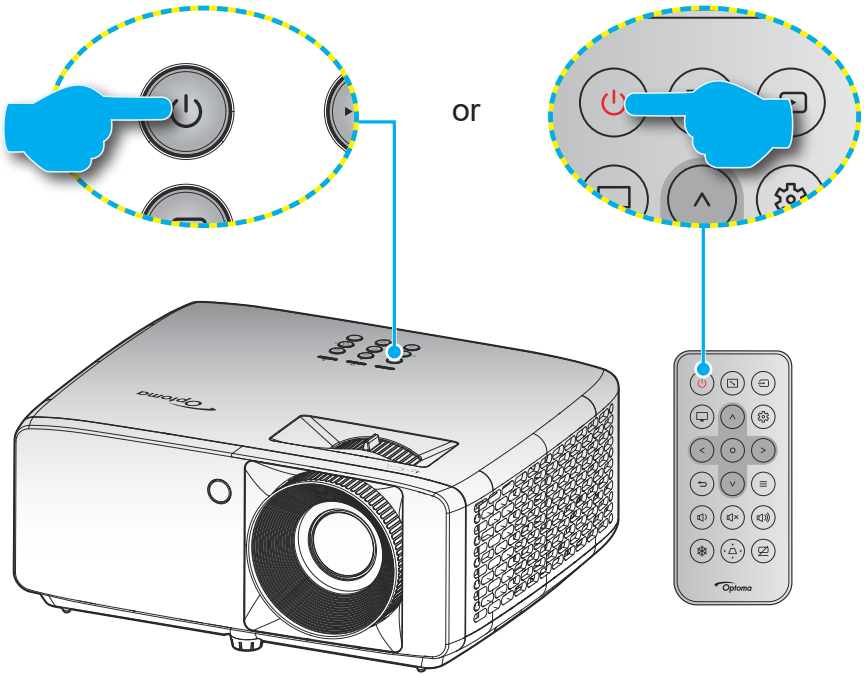


### Powering on

1. Securely connect the power lead and signal/source cable. When connected, the Power LED will turn red.
2. Turn on the projector by pressing the ⏻ button on the projector keypad or the ⏻ button on the remote control.
3. A start up screen will display in approximately 10 seconds and the Power LED will be flashing blue.

**Note:** *The first time the projector is turned on, you will be prompted to select the preferred language, projection orientation, and other settings.*

### Powering off

1. Turn off the projector by pressing the ⏻ button on the projector keypad or the ⏻ button on the remote control.
2. The following message will be displayed:

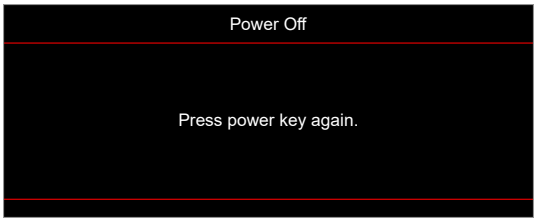


3. Press the ⏻/⏻ button again to confirm, otherwise the message will disappear after 15 seconds. When you press the ⏻/⏻ button for the second time, the projector will shut down.
4. The cooling fans will continue to operate for about 10 seconds for the cooling cycle and the Power LED will flash blue. When the Power LED turns solid red, this indicates the projector has entered standby mode. If you wish to turn the projector back on, you must wait until the cooling cycle has finished and the projector has entered standby mode. When the projector is in standby mode, simply press the⏻/⏻ button again to turn on the projector.
5. Disconnect the power lead from the electrical outlet and the projector.

**Note:** *It is not recommended that the projector is turned on immediately, right after a power off procedure.*

# USING THE PROJECTOR

## Selecting an input source

Turn on the connected source that you want to display on the screen, such as computer, notebook, video player, etc. The projector will automatically detect the source. If multiple sources are connected, press the button on the projector keypad or remote control to select the desired input.

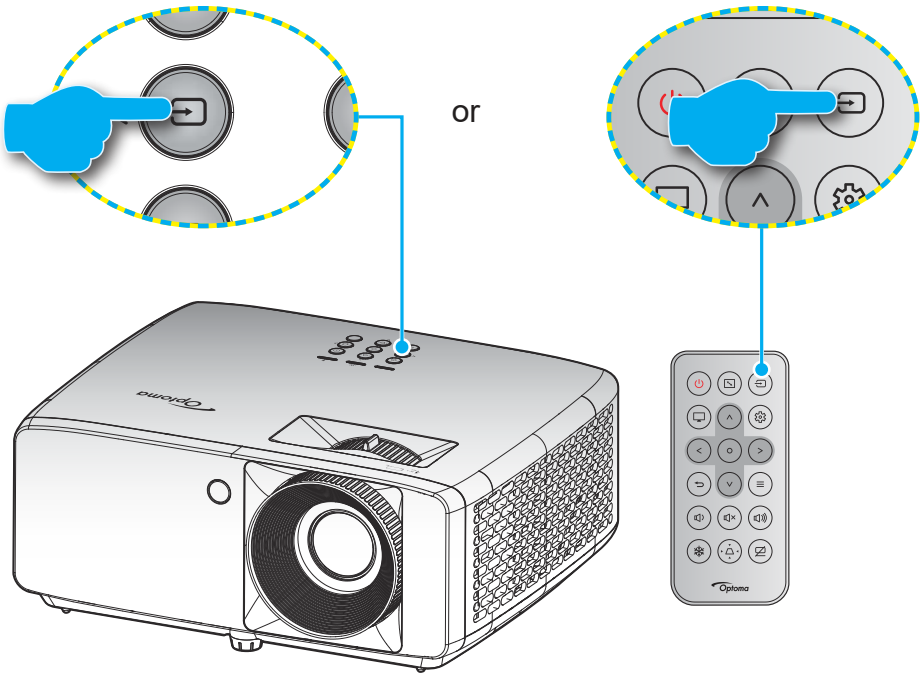

# USING THE PROJECTOR

## Menu navigation and features

The projector has multilingual on-screen display menus that allow you to make image adjustments and change a variety of settings. The projector will automatically detect the source.

1. To open the OSD menu, press the ≡ button on the projector keypad or remote control.
2. When OSD is displayed, use ∧ / ∨ keys to select any item in the main menu. While making a selection on a particular page, press the O button on the projector keypad or remote control to enter sub menu.
3. Use < / > keys to select the desired item in the sub menu and then press the O button to view further settings. Adjust the settings by using ∧ / ∨ / < / > keys.
4. Select the next item to be adjusted in the sub menu and adjust as described above.
5. Press the O button to confirm, and the screen will return to the main menu.
6. To exit, press the ≡ button again. The OSD menu will close and the projector will automatically save the new settings.

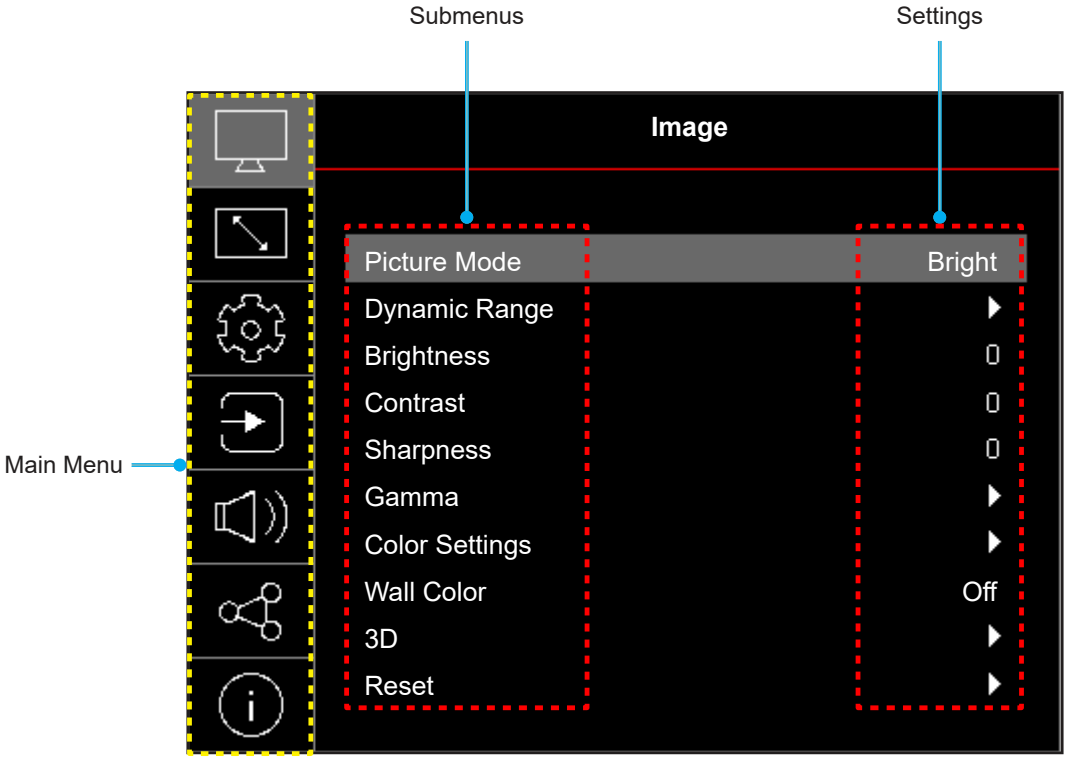

# USING THE PROJECTOR

## OSD Menu tree

**Note:** The OSD menu tree items and features are subject to models and region. Optoma reserve the right to add or remove items to improve product performance without notice.

| Main Menu | Sub Menu | Sub Menu 2 | Sub Menu 3 | Sub Menu 4 | Values |
|---|---|---|---|---|---|
| Image | Picture Mode | | | | Vivid |
| | | | | | HDR [1080p model] |
| | | | | | HLG [1080p model] |
| | | | | | Cinema |
| | | | | | Game |
| | | | | | Sport |
| | | | | | Reference |
| | | | | | Bright |
| | | | | | DICOM SIM. |
| | | | | | 3D |
| | Dynamic Range [1080p model] | HDR / HLG | | | Off |
| | | | | | Auto |
| | Brightness | | | | -50 ~ 50 |
| | Contrast | | | | -50 ~ 50 |
| | Sharpness | | | | 1 ~ 15 |
| | Gamma | | | | Film |
| | | | | | Graphics |
| | | | | | 1.8 |
| | | | | | 2.0 |
| | | | | | 2.2 |
| | | | | | 2.4 |
| | | | | | EOTF |
| | Color Settings | Color | | | -50 ~ 50 |
| | | Tint | | | -50 ~ 50 |
| | | BrilliantColor™ | | | 1 ~ 10 |
| | | Color Temperature | | | Warm |
| | | | | | Standard |
| | | | | | Cool |
| | | | | | Cold |
| | | CMS / Colour Adjustment | Color | | White / Red / Green / Blue / Cyan / Magenta / Yellow |
| | | | Hue | | -50 ~ 50 |
| | | | Saturation | | -50 ~ 50 |
| | | | Value (Luminance) | | -50 ~ 50 |
| | | | Reset | | No |
| | | | | | Yes |
| | | Color Space | | | HDMI Input: Auto / RGB(0~255) / RGB(16~235) / YUV |

| Main Menu | Sub Menu | Sub Menu 2 | Sub Menu 3 | Sub Menu 4 | Values |
|---|---|---|---|---|---|
| Image | Wall Color | | | | Off |
| | | | | | Blackboard |
| | | | | | Light Yellow |
| | | | | | Light Green |
| | | | | | Light Blue |
| | | | | | Pink |
| | | | | | Grey |
| | 3D | 3D Mode | | | Off |
| | | | | | On |
| | | 3D Sync Type | | | DLP-Link |
| | | | | | 3D Sync |
| | | 3D-2D Conversion | | | 3D |
| | | | | | L |
| | | | | | R |
| | | 3D Format | | | Auto |
| | | | | | Frame Packing |
| | | | | | Side by Side |
| | | | | | Top and Bottom |
| | | | | | Frame Sequential |
| | | 3D Sync Invert | | | Off |
| | | | | | On |
| | | Reset | | | No |
| | | | | | Yes |
| | Reset | | | | |
| Display | Projection Orientation | | | | Front |
| | | | | | Rear |
| | | | | | Ceiling-Top |
| | | | | | Rear-Top |
| | Light Source Mode | | | | Eco. |
| | | | | | Power =100% / 95% / 90% / 85% / 80% / 75% / 70% / 65% / 60% / 55% / 50%<br>(100%~20%)- Password lock |
| | Dynamic Black | | | | Off |
| | | | | | On |
| | Gaming Mode | | | | Off |
| | | | | | On |
| | Screen Type | | | | 4:3 |
| | | | | | 16:9 |
| | | | | | 16:10 |
| | Aspect Ratio | | | | 4:3 [Screen Type: 4:3] |
| | | | | | 16:9 [Screen Type: 16:9] |
| | | | | | 16:10 [Screen Type: 16:10] |
| | | | | | Native |
| | | | | | Auto |

# USING THE PROJECTOR

| Main Menu | Sub Menu | Sub Menu 2 | Sub Menu 3 | Sub Menu 4 | Values |
|---|---|---|---|---|---|
| Display | Geometric Correction | Auto Keystone | | | Off |
| | | | | | On |
| | | V Keystone | | | -40 ~ 40<br>[-30 ~ 30, for 1080p model] |
| | | H Keystone | | | -40 ~ 40<br>[-30 ~ 30, for 1080p model] |
| | | Four Corner Adjustment | | | |
| | | Reset | | | |
| | Digital Zoom | Zoom | | | -5 ~ 25 |
| | Image Shift | H | | | 0 ~ 100 |
| | | V | | | 0 ~ 100 |
| | | Reset | | | |
| | Reset | | | | |
| Setup | Test Pattern | | | | Green Grid |
| | | | | | Magenta Grid |
| | | | | | White Grid |
| | | | | | White |
| | | | | | Off |
| | Language | | | | English |
| | | | | | Deutsch |
| | | | | | Français |
| | | | | | Italiano |
| | | | | | Español |
| | | | | | Português |
| | | | | | Polski |
| | | | | | Nederlands |
| | | | | | Svenska |
| | | | | | Norsk |
| | | | | | Dansk |
| | | | | | Suomi |
| | | | | | ελληνικά |
| | | | | | 繁體中文 |
| | | | | | 簡体中文 |
| | | | | | 日本語 |
| | | | | | 한국어 |
| | | | | | Русский |
| | | | | | Magyar |
| | | | | | Čeština |
| | | | | | عربي |
| | | | | | ไทย |
| | | | | | Türkçe |
| | | | | | فارسی |
| | | | | | Tiếng Việt |
| | | | | | Bahasa Indonesia |
| | | | | | Română |

| Main Menu | Sub Menu | Sub Menu 2 | Sub Menu 3 | Sub Menu 4 | Values |
|---|---|---|---|---|---|
| Setup | Menu Settings | Menu Timer | | | Off |
| | | | | | 5s |
| | | | | | 10s |
| | | | | | 20s |
| | | | | | 30s |
| | | Information Hide | | | Off |
| | | | | | On |
| | High Altitude | | | | Off |
| | | | | | On |
| | Power Settings | Direct Power On | | | Off |
| | | | | | On |
| | | Signal Power On | | | Off |
| | | | | | On |
| | | Auto Power Off (min.) | | | 0 ~ 180 (1 min increments) |
| | | Sleep Timer (min.) | | | 0 ~ 990 (30 min increments) |
| | Security | Security | | | Off |
| | | | | | On |
| | | Security Timer | Month | | |
| | | | Day | | |
| | | | Hour | | |
| | | Change Password | | | |
| | Startup Logo | Logo | | | Default |
| | | | | | Neutral |
| | | | | | User |
| | Background Color | | | | None |
| | | | | | Blue |
| | | | | | Red |
| | | | | | Green |
| | | | | | Grey |
| | | | | | Logo |
| | Device Reset | Reset OSD | | | No |
| | | | | | Yes |
| | | Reset All Settings | | | No |
| | | | | | Yes |

# USING THE PROJECTOR

| Main Menu | Sub Menu | Sub Menu 2 | Sub Menu 3 | Sub Menu 4 | Values |
|---|---|---|---|---|---|
| Input | Auto Source | | | | Off |
| | | | | | On |
| | Auto Input Switch | | | | Off |
| | | | | | On |
| | HDMI CEC Settings | HDMI Link | | | Off |
| | | | | | On |
| | | Inclusive of TV | | | No |
| | | | | | Yes |
| | | Power On Link | | | Mutual |
| | | | | | PJ → Device |
| | | | | | Device → PJ |
| | | Power Off Link | | | Off |
| | | | | | On |
| | Reset | | | | No |
| | | | | | Yes |
| Audio | Volume | | | | 0 ~ 100 |
| | Mute | | | | Off |
| | | | | | On |
| | Internal Speaker | | | | Off |
| | | | | | On |
| | Audio Output | | | | Off |
| | | | | | On |
| | Reset | | | | |
| Control | Device ID | | | | 0~99 |
| | Remote Settings | IR Function | | | Off |
| | | | | | On |
| | Keypad Settings | Keypad Lock | | | Off |
| | | | | | On |
| | Reset | | | | |
| Information | Regulatory | | | | |
| | Serial Number | | | | |
| | Source | | | | |
| | Color Info | | | | |
| | Light Source Hours | | | | |
| | Picture Mode | | | | |
| | Device ID | | | | |
| | Filter Usage Hours<br>**Note:** *Optional dust filter may vary by regions. Please consult with your local agent.* | | | | |
| | Light Source Mode | | | | |
| | FW Version | DDP | | | |
| | | MCU | | | |

# USING THE PROJECTOR

## *Image menu*

### Image picture mode menu

There are several predefined display modes that you can choose from to suit your viewing preference. Each mode has been fine-tuned by our expert colour team to ensure superior colour performance for wide range of content.

- **Vivid**: In this mode, the color saturation and brightness are well-balanced. Choose this mode for playing games.
- **HDR / HLG**: Decodes and displays High Dynamic Range (HDR) / Hybrid Log Gamma (HLG) content for the deepest blacks, brightest whites, and vivid cinematic color using REC.2020 color gamut. This mode will be automatically enabled if HDR/HLG is set to Auto (and HDR/HLG Content is sent to projector – 4K UHD Blu-ray, 1080p/4K UHD HDR/HLG Games, 4K UHD Streaming Video). While HDR/HLG mode is active, other display modes (Cinema, Reference, etc.) cannot be selected as HDR/HLG delivers color that is highly accurate, exceeding the color performance of the other display modes.

  **Note:** *This option is only available for 1080p model.*
- **Cinema**: Provides the best balance of detail and colors for watching movies.
- **Game**: Optimises your projector for maximum contrast and vivid colours allowing you to see shadow detail when playing video games.
- **Sport**: Optimises your projector for watching sports playback or playing sports games.
- **Reference**: This mode reproduces colours as close as possible the image the way the movie director intended. Color, color temperature, brightness, contrast and gamma settings are all configured to Rec.709 color gamut. Select this mode for the most accurate colour reproduction when watching movies.
- **Bright**: This mode is suitable for environments where extra-high brightness is required, such as using the projector in well-lit rooms.
- **DICOM SIM.**: This mode has been created for viewing greyscale images, perfect for viewing X-rays and scans during medical training*.

  **Note:** **This projector is not suitable for use in medical diagnosis.*
- **3D**: Optimized settings for watching 3D content.

  **Note:** *To experience the 3D effect, you will need to have compatible DLP Link 3D glasses. See 3D section for more information.*

### Image dynamic range menu

**HDR / HLG**

Configure the High Dynamic Range (HDR) / Hybrid Log Gamma(HLG) setting and its effect when displaying video from 4K Blu-ray players and streaming devices.

- **Off**: Turn off HDR/HLG Processing. When set to Off, the projector will NOT decode HDR/HLG content.
- **Auto**: Auto detect HDR/HLG signal.

**Note:** *This option is only available for 1080p model.*

### Image brightness menu

Adjust the brightness of the image.

## Image contrast menu

The contrast controls the degree of difference between the lightest and darkest parts of the picture.

## Image sharpness menu

Adjust the sharpness of the image.

## Image gamma menu

Set up gamma curve type. After the initial setup and fine tuning is completed, utilize the Gamma Adjustment steps to optimize your image output.

- **Film**: For home theater.
- **Graphics**: For PC / Photo source.
- **1.8 / 2.0 / 2.2 / 2.4**: For specific PC / Photo source.
- **EOTF**: Best for HDR source.
  **Note:** *This option is only available for 1080p model.*

## Image color settings menu

**Color**

Adjust a video image from black and white to fully saturated color.

**Tint**

Adjust the color balance of red and green.

**BrilliantColor™**

This adjustable item utilizes a new color-processing algorithm and enhancements to enable higher brightness while providing true, more vibrant colors in picture.

**Color Temperature**

Select a color temperature from Warm, Standard, Cool, or Cold.

**CMS / Colour Adjustment**

Select the following options:

- Color: Adjust the red, green, blue, cyan, yellow, magenta, and white level of the image.
- Hue: Adjust the color balance of red and green.
- Saturation: Adjust a video image from black and white to fully saturated color.
- Value (Luminance): Adjust the luminance of the selected color.
- Reset: Return the factory default settings for color adjustment.

**Color Space**

Select an appropriate color matrix type from the following: Auto, RGB(0-255), RGB(16-235), and YUV.

## Image wall color menu

Designed to adjust the colors of the projected image when projecting on to a wall without a screen. Each mode has been fine-tuned by our expert colour team to ensure superior color performance.

There are several predefined modes that you can choose from to suit the colour of your wall. Select between off, blackboard, light yellow, light green, light blue, pink, and grey.

**Note:** *For accurate color reproduction, we recommend using a screen.*

## Image 3D menu

**Note:**

- *This projector is a 3D ready projector with DLP-Link 3D solution.*
- *Please make sure your 3D glasses are use for DLP-Link 3D before enjoy your video.*
- *This projector supports frame sequential (page-flip) 3D via HDMI1/HDMI2 ports.*
- *To enable 3D mode, the input frame rate should be set to 60Hz only, lower or higher frame rate is not supported.*
- *To reach the best performance, resolution 1920x1080 is recommended, please be noted that 4K (3840x2160) resolution is not supported in 3D mode.*

**3D Mode**

Use this option to disable or enable the 3D function.

- **Off**: Select “Off” to turn off 3D mode.
- **On**: Select “On” to turn on 3D mode.

**3D Sync Type**

Use this option to select 3D technology.

- **DLP-Link**: Select to use optimized settings for DLP 3D Glasses.
- **3D Sync**: Select to use optimized settings for IR, RF or polarized 3D Glasses.

**3D-2D Conversion**

Use this option to specify how the 3D content should appear on the screen.

- **3D**: Display 3D signal.
- **L**: Display the left frame of 3D content.
- **R**: Display the right frame of 3D content.

**3D Format**

Use this option to select the appropriate 3D format content.

- **Auto**: When a 3D identification signal is detected, the 3D format is selected automatically.
- **Frame Packing**: Display 3D signal in “Frame Packing” format.
- **Side by Side**: Display 3D signal in “Side-by-Side” format.
- **Top and Bottom**: Display 3D signal in “Top and Bottom” format.
- **Frame Sequential**: Display 3D signal in “Frame Sequential” format.

**3D Sync Invert**

Use this option to enable/disable the 3D sync invert function.

**Reset**

Return the factory default setting for 3D settings.

- **No**: Select to cancel Reset.
- **Yes**: Select to return the factory default settings for 3D.

## Image reset menu

Return the factory default settings for image settings.

# USING THE PROJECTOR

## *Display menu*

### Display projection orientation menu

Select the preferred projection between front, rear, ceiling-top, and rear-top.

### Display light source mode menu

Select a light source mode depending on the installation requirements.

### Display dynamic black menu

Use to automatically adjust the picture brightness in order to give optimum contrast performance.

### Display gaming mode menu

Enable this feature to reduce response times (input latency) during gaming to 8.6ms (1080p@120Hz). All geometry settings (example: Keystone, Four Corners) will be disabled when Gaming Mode is enabled. For more information is below.

**Note:**

- *The input lag by signals is described in the following table:*
- *The values in the table can vary slightly.*

| Source Timing | Gaming Mode | Output Timing | Output Resolution | Input Lag |
|---|---|---|---|---|
| 1080p60 | On | 1080p60Hz | 1080p | 17ms |
| 1080p120 | On | 1080p120Hz | 1080p | 8.6ms |
| 4K60 | On | 1080p60Hz | 1080p | 17ms |
| 1080p60 | Off | 1080p60Hz | 1080p | 33.8ms |
| 1080p120 | Off | 1080p120Hz | 1080p | 17ms |
| 4K60 | Off | 1080p60Hz | 1080p | 33.7ms |

- *1080p120 and 4K60 only support 1080p model.*

### Display screen type menu

Choose the screen type from 4:3, 16:9, and 16:10.

## Display aspect ratio menu

Select the aspect ratio of the displayed image between the following options:

- **4:3**: This format is for 4:3 input sources.
- **16:9**: This format is for 16:9 input sources, like HDTV and DVD enhanced for Wide screen TV.
- **16:10**: This format is for 16:10 input sources.
- **Native**: This format displays the original image without any scaling.
- **Auto**: Automatically selects the appropriate display format.

**XGA scaling table**:

| 16:9 screen | 480i/p | 576i/p | 1080i/p | 720p | PC |
|---|---|---|---|---|---|
| 4x3 | Scale to 1024x768. | | | | |
| 16x9 | Scale to 1024x576. | | | | |
| Native | No scaling will be made; the image is displayed with the resolution based on input source. | | | | |
| Auto | - If source is 4:3, the screen type will be scaled to 1024 x 768.<br>- If source is 16:9, the screen type will be scaled to 1024 x 576.<br>- If source is 15:9, the screen type will be scaled to 1024 x 614.<br>- If source is 16:10, the screen type will be scaled to 1024 x 640. | | | | |

**XGA auto mapping rule**:

| Auto | Input resolution | | Auto/Scale | |
|---|---|---|---|---|
| | H-resolution | V-resolution | 1024 | 768 |
| 4:3 | 640 | 480 | 1024 | 768 |
| | 800 | 600 | 1024 | 768 |
| | 1024 | 768 | 1024 | 768 |
| | 1600 | 1200 | 1024 | 768 |
| Wide Laptop | 1280 | 720 | 1024 | 576 |
| | 1280 | 768 | 1024 | 614 |
| | 1280 | 800 | 1024 | 640 |
| SDTV | 720 | 576 | 1024 | 576 |
| | 720 | 480 | 1024 | 576 |
| HDTV | 1280 | 720 | 1024 | 576 |
| | 1920 | 1080 | 1024 | 576 |

**WXGA scaling table (screen type 16x10)**:

| 16 : 10 screen | 480i/p | 576i/p | 1080i/p | 720p | PC |
|---|---|---|---|---|---|
| 4x3 | Scale to 1066x800. | | | | |
| 16x10 | Scale to 1280x800. | | | | |
| LBX | Scale to 1280x960, then get the central 1280x800 image to display. | | | | |
| Native mode | 1:1 mapping centered. | | 1:1 mapping display 1280x800. | 1280x720 centered. | 1:1 mapping centered. |
| Auto | - Input source will be fit into 1280x800 display area and be kept its original aspect ratio.<br>- If source is 4:3, the screen type will be scaled to 1066x800.<br>- If source is 16:9, the screen type will be scaled to 1280x720.<br>- If source is 15:9, the screen type will be scaled to 1280x768.<br>- If source is 16:10, the screen type will be scaled to 1280x800. | | | | |

**WXGA auto mapping rule (screen type 16x10)**:

| Auto | Input resolution | | Auto/Scale | |
|---|---|---|---|---|
| | H-resolution | V-resolution | 1280 | 800 |
| 4:3 | 640 | 480 | 1066 | 800 |
| | 800 | 600 | 1066 | 800 |
| | 1024 | 768 | 1066 | 800 |
| | 1280 | 1024 | 1066 | 800 |
| | 1400 | 1050 | 1066 | 800 |
| | 1600 | 1200 | 1066 | 800 |
| Wide Laptop | 1280 | 720 | 1280 | 720 |
| | 1280 | 768 | 1280 | 768 |
| | 1280 | 800 | 1280 | 800 |
| SDTV | 720 | 576 | 1280 | 720 |
| | 720 | 480 | 1280 | 720 |
| HDTV | 1280 | 720 | 1280 | 720 |
| | 1920 | 1080 | 1280 | 720 |

**WXGA scaling table (screen type 16x9)**:

| 16 : 9 screen | 480i/p | 576i/p | 1080i/p | 720p | PC |
|---|---|---|---|---|---|
| 4x3 | Scale to 960x720. | | | | |
| 16x9 | Scale to 1280x720. | | | | |
| LBX | Scale to 1280x960, then get the central 1280x720 image to display. | | | | |
| Native mode | 1:1 mapping centered. | | 1:1 mapping display 1280x720. | 1280x720 centered. | 1:1 mapping centred. |
| Auto | - If auto format is selected, the screen type will automatically become 16:9 (1280x720).<br>- If source is 4:3, the screen type will be scaled to 960x720.<br>- If source is 16:9, the screen type will be scaled to 1280x720.<br>- If source is 15:9, the screen type will be scaled to 1200x720.<br>- If source is 16:10, the screen type will be scaled to 1152x720. | | | | |

**WXGA auto mapping rule (screen type 16x9)**:

| Auto | Input resolution | | Auto/Scale | |
|---|---|---|---|---|
| | H-resolution | V-resolution | 1280 | 720 |
| 4:3 | 640 | 480 | 960 | 720 |
| | 800 | 600 | 960 | 720 |
| | 1024 | 768 | 960 | 720 |
| | 1280 | 1024 | 960 | 720 |
| | 1400 | 1050 | 960 | 720 |
| | 1600 | 1200 | 960 | 720 |
| Wide Laptop | 1280 | 720 | 1280 | 720 |
| | 1280 | 768 | 1200 | 720 |
| | 1280 | 800 | 1152 | 720 |
| SDTV | 720 | 576 | 1280 | 720 |
| | 720 | 480 | 1280 | 720 |
| HDTV | 1280 | 720 | 1280 | 720 |
| | 1920 | 1080 | 1280 | 720 |

**1080p scaling table**:

| 16:9 screen | 480i/p | 576i/p | 1080i/p | 720p | PC |
|---|---|---|---|---|---|
| 4x3 | Scale to 1440x1080. | | | | |
| 16x9 | Scale to 1920x1080. | | | | |
| LBX | Scale to 1920x1440, then get the central 1920x1080 image to display. | | | | |
| Native mode | - 1:1 mapping centered.<br>- No scaling will be made; the image is displayed with the resolution based on input source. | | | | |
| Auto | - If auto format is selected, the screen type will automatically become 16:9 (1920x1080).<br>- If source is 4:3, the screen type will be scaled to 1440 x1080.<br>- If source is 16:9, the screen type will be scaled to 1920x1080.<br>- If source is 16:10, the screen type will be scaled to 1920x1200 and cut 1920x1080 area to display. | | | | |

**1080p auto mapping rule**:

| Auto | Input resolution | | Auto/Scale | |
|---|---|---|---|---|
| | H-resolution | V-resolution | 1920 | 1080 |
| 4:3 | 640 | 480 | 1440 | 1080 |
| | 800 | 600 | 1440 | 1080 |
| | 1024 | 768 | 1440 | 1080 |
| | 1280 | 1024 | 1440 | 1080 |
| | 1400 | 1050 | 1440 | 1080 |
| | 1600 | 1200 | 1440 | 1080 |
| Wide Laptop | 1280 | 720 | 1920 | 1080 |
| | 1280 | 768 | 1800 | 1080 |
| | 1280 | 800 | 1728 | 1080 |
| SDTV | 720 | 576 | 1350 | 1080 |
| | 720 | 480 | 1620 | 1080 |
| HDTV | 1280 | 720 | 1920 | 1080 |
| | 1920 | 1080 | 1920 | 1080 |

## Display geometric correction menu

**Auto Keystone**

Correct keystone digitally to fit the projected image on the area on which you are projecting.

**Note:**

- *The image size will reduce slightly when adjusting the horizontal and vertical keystone.*
- *When the Auto Keystone is used, the Four Corner Adjustment function will be disabled*.

**V Keystone**

Adjust image distortion vertically and make a squarer image. Vertical keystone is used to correct a keystoned image shape in which the top and bottom are slanted to one of the sides. This is intended when for use with vertically on-axis applications.

**H Keystone**

Adjust image distortion horizontally and make a squarer image. Horizontal keystone is used to correct a keystoned image shape in which the left and right borders of the image are unequal in length. This is intended for use with horizontally on-axis applications.

**Four Corner Adjustment**

This setting allows the projected image to be adjusted from each corner to make a square image when the projection surface is not level.

**Reset**

Return the factory default setting for geometric correction settings.

## Display digital zoom menu

Use to reduce or magnify an image on the projection screen. Digital Zoom is not the same as optical zoom and an result in degradation of image quality.

**Note:** *Zoom settings are retained on power cycle of the projector.*

## Display image shift menu

Adjust the projected image position horizontally (H) or vertically (V).

## Display reset menu

Return the factory default settings for display settings.

## *Setup menu*

### Setup test pattern menu

Select the test pattern from green grid, magenta grid, white grid, white, or disable this function (off).

### Setup language menu

Select the multilingual OSD menu between English, German, French, Italian, Spanish, Portuguese, Polish, Dutch, Swedish, Norwegian, Danish, Finnish, Greek, Traditional Chinese, Simplified Chinese, Japanese, Korean, Russian, Hungarian, Czechoslovak, Arabic, Thai, Turkish, Farsi, Vietnamese, Indonesian, and Romanian.

### Setup menu settings menu

**Menu Timer**

Set the duration where the OSD menu stays visible on the screen.

**Information Hide**

Enable this function to hide the information message.

### Setup high altitude menu

When “On” is selected, the fans will spin faster. This feature is useful in high altitude areas where the air is thin.

### Setup power settings menu

**Direct Power On**

Choose “On” to activate Direct Power mode. The projector will automatically power on when AC power is supplied, without pressing the “Power” key on the projector keypad or on the remote control.

**Signal Power On**

Choose “On” to activate Signal Power mode. The projector will automatically power on when a signal is detected, without pressing the “Power” key on the projector Keypad or on the remote control.

**Note:**

- *If the “Signal Power On” option is turned “On”, the power consumption of the projector in standby mode will be over 3W.*
- *This function is applicable with HDMI source.*

**Auto Power Off (min.)**

Sets the countdown timer interval. The countdown timer will start, when there is no signal being sent to the projector. The projector will automatically power off when the countdown has finished (in minutes).

**Sleep Timer (min.)**

Sets the countdown timer interval. The countdown timer will start, with or without a signal being sent to the projector. The projector will automatically power off when the countdown has finished (in minutes).

**Note:** *The Sleep Timer is reset every time when the projector is powered off.*

# USING THE PROJECTOR

## Setup security menu

**Security**

Enable this function to prompt for a password before using the projector.

- **On:** Choose “On” to use security verification when the turning on the projector.
- **Off:** Choose “Off” to be able to switch on the projector without password verification.

**Note:** *The default password is 1234.*

**Security Timer**

Can be select the time (Month/Day/Hour) function to set the number of hours the projector can be used. Once this time has elapsed you will be requested to enter your password again.

**Change Password**

Use to set or modify the password that is prompted when turning the projector on.

## Setup startup logo menu

Use this function to set the desired startup screen. If changes are made, they will take effect the next time the projector is powered on.

- **Default:** The default startup screen.
- **Neutral:** Logo is not displayed on startup screen.
- **User:** Logo capture tool required.

  **Note:** *Please visit the website to download the logo capture tool.*
  *The supported file format: png/bmp/jpg.*

## Setup background color menu

Use this function to display a blue, red, green, grey color, none, or logo screen when no signal is available.

**Note:** *If the background color is set to “None”, then the background color is black.*

## Setup device reset menu

**Reset OSD**

Return the factory default settings for OSD menu settings.

**Reset All Settings**

Return the factory default settings for all settings.

# USING THE PROJECTOR

## *Input menu*

### Input auto source menu

Choose this option to let the projector automatically find an available input source.

### Input auto input switch menu

When HDMI input signal is detected, the projector will automatically switch the input source.

### Input HDMI CEC settings menu

**Note:** *When you connect HDMI CEC-compatible devices to the projector with HDMI cables, you can control them on the same power on or power off status using the HDMI Link control feature in the projector's OSD. This lets one device or multiple devices in a group power on or power off via HDMI Link Feature in a typical configuration, your DVD player may be connected to the projector through an amplifier or home theater system.*

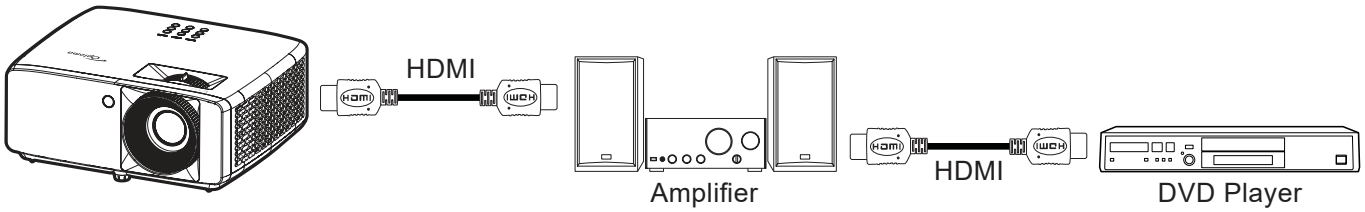


**HDMI Link**

Enable/disable the HDMI Link function.

**Inclusive of TV**

If the settings is set to "Yes" then the power on and power off link options are available.

**Power On Link**

CEC power on command.

- **Mutual:** Both projector and CEC device will be turned on simultaneously.
- **PJ → Device:** The CEC device will be turned on only after the projector is switched on.
- **Device → PJ:** The projector will be switched on only after the CEC device is turned on.

**Power Off Link**

Enable this function to let both HDMI Link and projector to be automatically turned off at the same time.

### Input reset menu

Return the factory default settings for input settings.

## *Audio menu*

### Audio volume menu

Adjust the volume level.

### Audio mute menu

Use this option to temporarily turn off the sound.

- **On:** Choose “On” to turn mute on.
- **Off:** Choose “Off” to turn mute off.

**Note:** *“Mute” function affects both internal and external speaker volume.*

### Audio internal speaker menu

Turn the built-in speaker on or off.

### Audio audio output menu

Turn the external audio on or off.

### Audio reset menu

Return the factory default settings for audio settings.

## *Control menu*

### Control device ID menu

ID definition can be set up by menu (range 0-99), and allow user control an individual projector by using RS232 command.

**Note:** *For a full list of RS232 commands, please refer to the RS232 user manual on our website.*

### Control remote settings menu

**IR Function**

Set the IR function setting.

- **On:** Choose “On”, the projector can be operated by the remote control from the top and front IR receivers.
- **Off:** Choose “Off”, the projector can’t be operated by the remote control. By selecting “Off”, you will be able to use the Keypad keys.

### Control keypad settings menu

**Keypad Lock**

When the keypad lock function is “On”, the Keypad will be locked. However, the projector can be operated by the remote control. By selecting “Off”, you will be able to reuse the Keypad.

### Control reset menu

Return the factory default settings for control settings.

# USING THE PROJECTOR

## *Information menu*

### Information menu

View the projector information as listed below:

- Regulatory
- Serial Number
- Source
- Color Info
- Light Source Hours
- Picture Mode
- Device ID
- Filter Usage Hours
- Light Source Mode
- FW Version

# ADDITIONAL INFORMATION

## Compatible resolutions

***Input Signal for HDMI***

| Signal | Resolution | Refresh Rate(Hz) | Notes for Mac |
|---|---|---|---|
| VGA | 640 x 480 | 60 | Mac 60/72/85/ |
| SVGA | 800 x 600 | 60(*2)/72/85/120(*2) | Mac 60/72/85 |
| XGA | 1024 x 768 | 48/50(*4)/60(*2)/70/75/85/120(*2) | Mac 60/70/75/85 |
| SDTV(480I) | 720 x 480 | 60 | |
| SDTV(480P) | 720 x 480 | 60 | |
| SDTV(576I) | 720 x 576 | 50 | |
| SDTV(576P) | 720 x 576 | 50 | |
| WSVGA(1024X600) | 1024 x 600 | 60 (*3) | |
| HDTV(720p) | 1280 x 720 | 50(*2)/60/120(*2) | Mac 60 |
| WXGA | 1280 x 768 | 60/75/85 | Mac 75 |
| | 1280 x 800 | 60/50/48hz(*4) | Mac 60 |
| WXGA(*5) | 1366 x 768 | 60 | |
| SXGA | 1280 x 1024 | 60/75/85 | Mac 60/75 |
| | 1440 x 900 | 60 | |
| SXGA+ | 1400 x 1050 | 60 | |
| UXGA | 1600 x 1200 | 60 | |
| HDTV(1080I) | 1920 x 1080 | 50/60 | |
| HDTV(1080p) | 1920 x 1080 | 24/30/50/60 | Mac 60 |
| WUXGA | 1920 x 1200(*1) | 60/50(*4) | Mac 60 |

**Note:**

- *(*1) 1920 x 1200 @60hz only support RB(reduced blanking).*
- *(*2) 3D timing for 3D Ready projector(STD) and True 3D projector(Option).*
- *(*3) New ERA & Data projector must have this timing WSVGA, Proscene and Home is nice to have.*
- *(*4) Proscene and Data projector >4,000L, Native resolution must support @50Hz/48Hz.*
- *(*5) Windows 8 standard timing.*

# ADDITIONAL INFORMATION

***True 3D Video Compatibility***

| | | Input timing | | |
|---|---|---|---|---|
| ***Input resolutions*** | HDMI 1.4a 3D Input | 1280 x 720P @ 50Hz | Top-and-Bottom | |
| | | 1280 x 720P @ 60Hz | Top-and-Bottom | |
| | | 1280 x 720P @ 50Hz | Frame packing | |
| | | 1280 x 720P @ 60Hz | Frame packing | |
| | | 1920 x 1080i @ 50Hz | Side-by-Side(Half) | |
| | | 1920 x 1080i @ 60Hz | Side-by-Side(Half) | |
| | | 1920 x 1080P @ 24Hz | Top-and-Bottom | |
| | | 1920 x 1080P @ 24Hz | Frame packing | |
| | HDMI 1.3 | 1920 x 1080i @ 50Hz | Side-by-Side(Half) | SBS mode is on |
| | | 1920 x 1080i @ 60Hz | | |
| | | 1280 x 720P @ 50Hz | | |
| | | 1280 x 720P @ 60Hz | | |
| | | 800 x 600 @ 60Hz | | |
| | | 1024 x 768 @ 60Hz | | |
| | | 1280 x 800 @ 60Hz | | |
| | | 1920 x 1080i @ 50Hz | Top-and-Bottom | TAB mode is on |
| | | 1920 x 1080i @ 60Hz | | |
| | | 1280 x 720P @ 50Hz | | |
| | | 1280 x 720P @ 60Hz | | |
| | | 800 x 600 @ 60Hz | | |
| | | 1024 x 768 @ 60Hz | | |
| | | 1280 x 800 @ 60Hz | | |
| | | 1024 x 768 @ 120Hz | Frame Sequential | 3D format is Frame sequential |
| | | 1280x 720 @ 120Hz | | |

**Note:**

- *If 3D input is 1080p@24hz, the DMD should replay with integral multiple with 3D mode*
- *1080i@25Hz and 720p@50Hz will run in 100Hz; other 3D timing will run in 120Hz.*
- *1080p@24Hz will run 144Hz.*

# ADDITIONAL INFORMATION

### *EDID (Digital)*

| XGA/WXGA | | | | |
|---|---|---|---|---|
| B0 / Established Timing | B0 / Standard Timing | B0 / Detail Timing | B1 / Video Mode | B1 / Detail Timing |
| 640 x 480 @ 60Hz | 1600 x 1200 @ 60Hz | Native timing: | 640 x 480p @ 60Hz | XGA: |
| 640 x 480 @ 67Hz | 1440 x 900 @ 60Hz | XGA:<br>1024 x 768 @ 60Hz | 720(1440) x 480i @ 60Hz | 1280 x 720p @ 60Hz |
| 640 x 480 @ 72Hz | 1280 x 720 @ 60Hz | WXGA:<br>1280 x 800 @ 60Hz | 720(1440) x 576i @ 50Hz | 1366 x 768 @ 60Hz |
| 640 x 480 @ 75Hz | 1280 x 800 @ 60Hz | | 720 x 480p @ 60Hz | 1920 x 1080p @ 50Hz |
| 800 x 600 @ 56Hz | 640 x 480 @ 120Hz | | 720 x 576p @ 50Hz | 1920 x 1080p @ 60Hz |
| 800 x 600 @ 60Hz | 800 x 600 @ 120Hz | | 1280 x 720p @ 60Hz | |
| 800 x 600 @ 72Hz | 1024 x 768 @ 120Hz | | 1280 x 720p @ 50Hz | WXGA: |
| 800 x 600 @ 75Hz | 1280 x 720 @ 120Hz | | 1920 x 1080i @ 60Hz | 1280 x 800p @ 120Hz |
| 1024 x 768 @ 60Hz | | | 1920 x 1080i @ 50Hz | 1366 x 768 @ 60Hz |
| 1024 x 768 @ 70Hz | | | 1920 x 1080p @ 60Hz | 1920 x 1080p @ 50Hz |
| 1024 x 768 @ 75Hz | | | 1920 x 1080p @ 50Hz | 1920 x 1080p @ 60Hz |
| 1280 x 1024 @ 75Hz | | | 1920 x 1080p @ 24Hz | |
| 1152 x 870 @ 75Hz | | | 1920 x 1080p @ 25Hz | |
| | | | 1920 x 1080p @ 30Hz | |

| 1080p | | | | |
|---|---|---|---|---|
| B0 / Established Timing | B0 / Standard Timing | B0 / Detail Timing | B1 / Video Mode | B1 / Detail Timing |
| 640 x 480 @ 60Hz | 1280 x 1024 @ 60Hz | Native timing: | 720(1440) x 480i @ 60Hz 4:3 | 3840 x 2160p @ 60Hz |
| 640 x 480 @ 67Hz | 1400 x 1050@ 60Hz | 1920 x 1080p @60Hz | 720(1440) x 576i @ 50 Hz 4:3 | |
| 640 x 480 @ 72Hz | 1024 x 768@ 120Hz | | 720 x 480p @ 60 Hz 4:3 | |
| 640 x 480 @ 75Hz | 1280 x 720 @ 60Hz | | 720 x 576p @ 50 Hz 4:3 | |
| 800 x 600 @ 56Hz | 1280 x 720 @ 120Hz | | 1280 x 720p @ 60 Hz 16:9 | |
| 800 x 600 @ 60Hz | 1280 x 800 @ 60Hz | | 1280 x 720p @ 50 Hz 16:9 | |
| 800 x 600 @ 72Hz | 1440 x 900@ 60Hz | | 1920 x 1080i @ 60 Hz 16:9 | |
| 800 x 600 @ 75Hz | 1600 x1200 @ 60Hz | | 640 x 480p @ 60 Hz 4:3 | |
| 1024 x 768 @ 60Hz | | | 1920 x 1080p @ 60 Hz 16:9 | |
| 1024 x 768 @ 70Hz | | | 1920 x 1080p @ 50 Hz 16:9 | |
| 1024 x 768 @ 75Hz | | | 1920 x 1080p @ 24 Hz 16:9 | |
| 1280 x 1024 @ 75Hz | | | 1920 x 1080p @ 30 Hz 16:9 | |
| 1152 x 870 @ 75Hz | | | 1920 x 1080p @ 120 Hz 16:9 | |
| | | | 3840 x 2160p @ 24 Hz 16:9 | |
| | | | 3840 x 2160p @ 25 Hz 16:9 | |
| | | | 3840 x 2160p @ 30 Hz 16:9 | |
| | | | 3840 x 2160p @ 50 Hz 16:9 | |
| | | | 3840 x 2160p @ 60 Hz 16:9 | |
| | | | 4096 x 2160p @ 24 Hz<br>256:135 | |
| | | | 4096 x 2160p @ 25 Hz<br>256:135 | |
| | | | 4096 x 2160p @ 30 Hz<br>256:135 | |
| | | | 4096 x 2160p @ 50 Hz<br>256:135 | |

# ADDITIONAL INFORMATION

| 1080p | | | | |
|---|---|---|---|---|
| B0 / Established Timing | B0 / Standard Timing | B0 / Detail Timing | B1 / Video Mode | B1 / Detail Timing |
| | | | 4096 x 2160p @ 60 Hz 256:135 | |
| | | | 720 x 480p @ 60 Hz 16:9 | |
| | | | 720(1440) x 480i @ 60 Hz 16:9 | |
| | | | 720 x 576p @ 50 Hz 16:9 | |
| | | | 2880 x 480i @ 60 Hz 16:9 | |
| | | | 1440 x 480p @ 60 Hz 16:9 | |
| | | | 2880 x 576i @ 50 Hz 16:9 | |
| | | | 1440 x 576p @ 50 Hz 16:9 | |
| | | | 720(1440) x 576i @ 50 Hz 16:9 | |

# ADDITIONAL INFORMATION

## Image size and projection distance

### XGA

| Diagonal Length Size of (16:9) Screen | Screen Size (W x H) | | | | Projection Distance (D) | | | | Offset (Hd) | |
|---|---|---|---|---|---|---|---|---|---|---|
| | (m) | | (inch) | | (m) | | (feet) | | | |
| | Width | Height | Width | Height | Wide | Tele | Wide | Tele | (m) | (inch) |
| 25.4 | 0.52 | 0.39 | 20.32 | 15.24 | 1.00 | 1.11 | 3.28 | 3.64 | 0.06 | 2.36 |
| 30 | 0.61 | 0.46 | 24.00 | 18.00 | 1.18 | 1.32 | NA | 4.33 | 0.07 | 2.76 |
| 40 | 0.81 | 0.61 | 32.00 | 24.00 | 1.58 | 1.76 | 5.18 | 5.77 | 0.09 | 3.54 |
| 50 | 1.02 | 0.76 | 40.00 | 30.00 | 1.97 | 2.19 | 6.46 | 7.19 | 0.12 | 4.72 |
| 60 | 1.22 | 0.91 | 48.00 | 36.00 | 2.37 | 2.63 | 7.78 | 8.63 | 0.14 | 5.51 |
| 70 | 1.42 | 1.07 | 56.00 | 42.00 | 2.76 | 3.07 | 9.06 | 10.07 | 0.16 | 6.30 |
| 80 | 1.63 | 1.22 | 64.00 | 48.00 | 3.15 | 3.51 | 10.33 | 11.52 | 0.18 | 7.09 |
| 90 | 1.83 | 1.37 | 72.00 | 54.00 | 3.55 | 3.95 | 11.65 | 12.96 | 0.21 | 8.27 |
| 100 | 2.03 | 1.52 | 80.00 | 60.00 | 3.94 | 4.39 | 12.93 | 14.40 | 0.23 | 9.06 |
| 120 | 2.44 | 1.83 | 96.00 | 72.00 | 4.73 | 5.27 | 15.52 | 17.29 | 0.27 | 10.63 |
| 150 | 3.05 | 2.29 | 120.00 | 90.00 | 5.91 | 6.58 | 19.39 | 21.59 | 0.34 | 13.39 |
| 180 | 3.66 | 2.74 | 144.00 | 108.00 | 7.10 | 7.90 | 23.29 | 25.92 | 0.41 | 16.14 |
| 200 | 4.06 | 3.05 | 160.00 | 120.00 | 7.88 | 8.78 | 25.85 | 28.81 | 0.46 | 18.11 |
| 250 | 5.08 | 3.81 | 200.00 | 150.00 | 9.86 | 10.97 | 32.35 | 35.99 | 0.57 | 22.44 |
| 300 | 6.10 | 4.57 | 240.00 | 180.00 | 11.83 | NA | 38.81 | NA | 0.69 | 27.17 |

**Note:** *Zoom Ratio: 1.1x*

### WXGA

| Diagonal Length Size of (16:9) Screen | Screen Size (W x H) | | | | Projection Distance (D) | | | | Offset (Hd) | |
|---|---|---|---|---|---|---|---|---|---|---|
| | (m) | | (inch) | | (m) | | (feet) | | | |
| | Width | Height | Width | Height | Wide | Tele | Wide | Tele | (m) | (inch) |
| 30 | 0.65 | 0.4 | 25.44 | 15.90 | 1.00 | 1.11 | NA | 3.64 | 0.05 | 1.97 |
| 40 | 0.86 | 0.54 | 33.92 | 21.20 | 1.33 | 1.48 | 4.36 | 4.86 | 0.06 | 2.36 |
| 50 | 1.08 | 0.67 | 42.40 | 26.50 | 1.66 | 1.85 | 5.45 | 6.07 | 0.08 | 3.15 |
| 60 | 1.29 | 0.81 | 50.88 | 31.80 | 2.00 | 2.22 | 6.56 | 7.28 | 0.09 | 3.54 |
| 70 | 1.51 | 0.94 | 59.36 | 37.10 | 2.33 | 2.59 | 7.64 | 8.50 | 0.12 | 4.72 |
| 80 | 1.72 | 1.08 | 67.84 | 42.40 | 2.66 | 2.96 | 8.73 | 9.71 | 0.13 | 5.12 |
| 90 | 1.94 | 1.21 | 76.32 | 47.70 | 2.99 | 3.33 | 9.81 | 10.93 | 0.15 | 5.91 |
| 100 | 2.15 | 1.35 | 84.80 | 53.00 | 3.33 | 3.70 | 10.93 | 12.14 | 0.16 | 6.30 |
| 120 | 2.58 | 1.62 | 101.76 | 63.60 | 3.99 | 4.45 | 13.09 | 14.60 | 0.19 | 7.48 |
| 150 | 3.23 | 2.02 | 127.20 | 79.50 | 4.99 | 5.56 | 16.37 | 18.24 | 0.24 | 9.45 |
| 180 | 3.88 | 2.42 | 152.64 | 95.40 | 5.99 | 6.67 | 19.65 | 21.88 | 0.29 | 11.42 |
| 200 | 4.31 | 2.69 | 169.60 | 106.00 | 6.65 | 7.41 | 21.82 | 24.31 | 0.33 | 12.99 |
| 250 | 5.38 | 3.37 | 212.00 | 132.50 | 8.31 | 9.26 | 27.26 | 30.38 | 0.40 | 15.75 |
| 300 | 6.46 | 4.04 | 254.40 | 159.00 | 9.98 | NA | 32.74 | NA | 0.48 | 18.90 |

**Note:** *Zoom Ratio: 1.1x*

# ADDITIONAL INFORMATION

**1080p**

| Diagonal Length Size of (16:9) Screen | Screen Size (W x H) | | | | Projection Distance (D) | | | | Offset (Hd) | |
|---|---|---|---|---|---|---|---|---|---|---|
| | (m) | | (inch) | | (m) | | (feet) | | | |
| | Width | Height | Width | Height | Wide | Tele | Wide | Tele | (m) | (inch) |
| 24.5 | 0.54 | 0.31 | 21.35 | 12.01 | 0.80 | 0.88 | NA | 2.89 | 0.04 | 1.57 |
| 30 | 0.66 | 0.37 | 26.15 | 14.71 | 0.98 | 1.08 | NA | 3.54 | 0.06 | 2.36 |
| 40 | 0.89 | 0.5 | 34.86 | 19.6 | 1.31 | 1.43 | 4.30 | 4.69 | 0.08 | 3.15 |
| 50 | 1.11 | 0.62 | 43.58 | 24.5 | 1.63 | 1.79 | 5.35 | 5.87 | 0.10 | 3.94 |
| 60 | 1.33 | 0.75 | 52.29 | 29.4 | 1.96 | 2.15 | 6.43 | 7.05 | 0.12 | 4.72 |
| 70 | 1.55 | 0.87 | 61.01 | 34.3 | 2.29 | 2.51 | 7.51 | 8.23 | 0.14 | 5.51 |
| 80 | 1.77 | 1 | 69.73 | 39.2 | 2.61 | 2.87 | 8.56 | 9.42 | 0.16 | 6.30 |
| 90 | 1.99 | 1.12 | 78.44 | 44.1 | 2.94 | 3.23 | 9.65 | 10.60 | 0.18 | 7.09 |
| 100 | 2.21 | 1.25 | 87.16 | 49 | 3.27 | 3.58 | 10.73 | 11.75 | 0.19 | 7.48 |
| 120 | 2.66 | 1.49 | 104.59 | 58.8 | 3.92 | 4.30 | 12.86 | 14.11 | 0.24 | 9.45 |
| 150 | 3.32 | 1.87 | 130.74 | 73.5 | 4.90 | 5.38 | 16.08 | 17.65 | 0.30 | 11.81 |
| 180 | 3.98 | 2.24 | 156.88 | 88.2 | 5.88 | 6.45 | 19.29 | 21.16 | 0.36 | 14.17 |
| 200 | 4.43 | 2.49 | 174.32 | 98.1 | 6.54 | 7.17 | 21.46 | 23.52 | 0.40 | 15.75 |
| 250 | 5.53 | 3.11 | 217.89 | 122.6 | 8.17 | 8.96 | 26.80 | 29.40 | 0.50 | 19.69 |
| 300 | 6.64 | 3.74 | 261.47 | 147.1 | 9.80 | 10.75 | 32.15 | 35.27 | 0.59 | 23.23 |
| 306 | 6.77 | 3.81 | 266.70 | 150 | 10.00 | NA | 32.81 | NA | 0.61 | 24.02 |

**Note:** *Zoom Ratio: 1.1x*

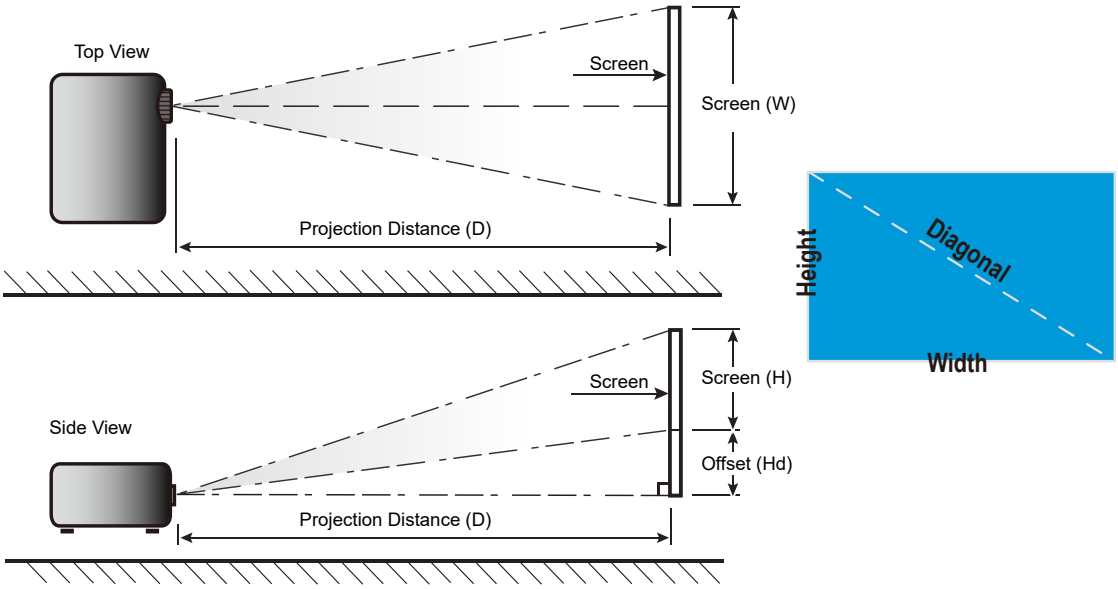

# ADDITIONAL INFORMATION

## Projector dimensions and ceiling mount installation

1. To prevent damage to your projector, please use the Optoma ceiling mount.
2. If you wish to use a third party ceiling mount kit, please ensure the screws used to attach a mount to the projector meet the following specifications:

- Screw type: M4*10mm
- Minimum screw length: 10mm

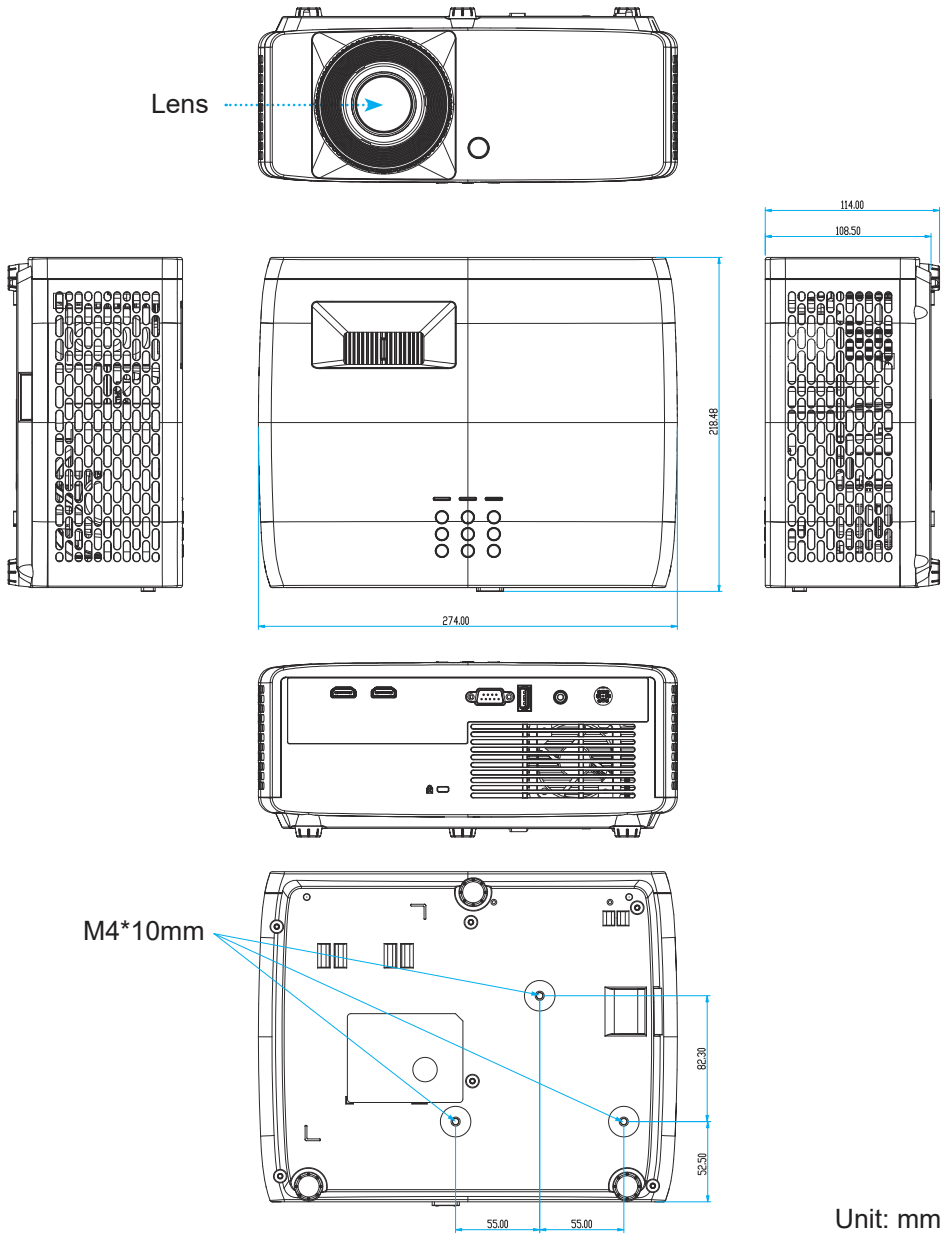


**Note:** *Please note that damage resulting from incorrect installation will void the warranty.*

Warning:

- If you buy a ceiling mount from another company, please be sure to use the correct screw size. Screw size will vary depending on the thickness of the mounting plate.
- Be sure to keep at least 10 cm gap between the ceiling and the bottom of the projector.
- Avoid installing the projector near a heat source.

# ADDITIONAL INFORMATION

For ceiling mounting, you could purchase a cable tie whose length is over 250mm to fix the AC adapter if needed.

1. Install the cable tie to the designated holes on the bottom of the projector. Then place the AC adapter onto its slot.

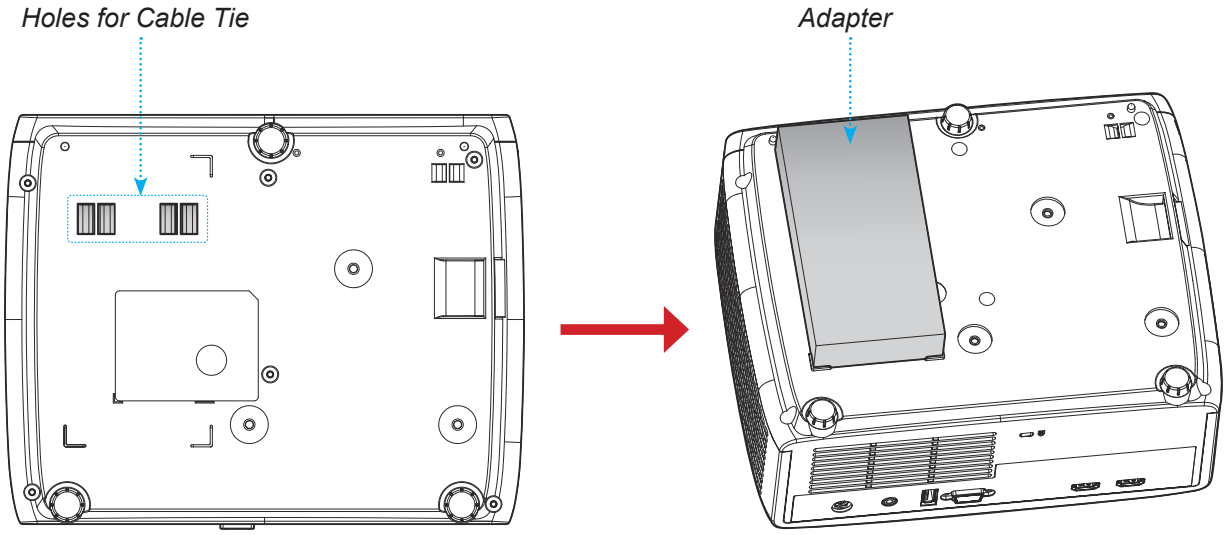


2. Secure the AC adapter with the cable tie.

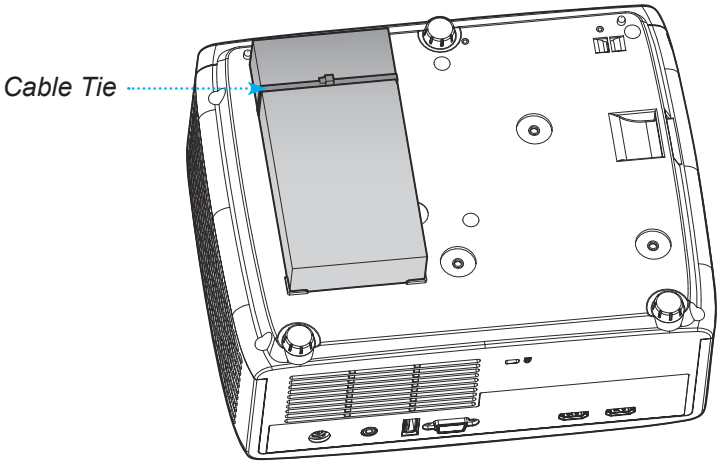

# ADDITIONAL INFORMATION

## IR remote control codes

| Key | | NEC format | Customer Code | | Key Code | | Description |
|---|---|---|---|---|---|---|---|
| | | | Byte 1 | Byte 2 | Byte 3 | Byte 4 | |
| Power | ⏻ | Format 1 | 32 | CD | 02 | FD | Press to turn on / off the projector. |
| Aspect ratio | ⤡ | Format 1 | 32 | CD | 64 | 9B | Press to change the aspect ratio of a displayed image. |
| Source | ⇥ | Format 1 | 32 | CD | C3 | 3C | Press to select an input signal. |
| Mode | 🖵 | Format 1 | 32 | CD | 5 | FA | Press to change the Picture mode of a displayed image. |
| Four directional select keys (Up) | ∧ | Format 2 | 32 | CD | 11 | EE | Press to select items or make adjustments to your selection. |
| Four directional select keys (Left) | < | Format 2 | 32 | CD | 10 | EF | |
| Four directional select keys (Right) | > | Format 2 | 32 | CD | 12 | ED | |
| Four directional select keys (Down) | ∨ | Format 2 | 32 | CD | 14 | EB | |
| Enter | ○ | Format 1 | 32 | CD | 0F | F0 | Confirm your item selection. |
| Settings/Setup Menu | ⚙ | Format 1 | 32 | CD | A8 | 57 | Press to enter the Setup menu. |
| Return | ⮌ | Format 1 | 32 | CD | 0D | F2 | Press to return to the previous menu. |
| Menu | ≡ | Format 1 | 32 | CD | 0E | F1 | Press to display or exit the on-screen display menus. |
| Volume - | 🔉 | Format 2 | 32 | CD | 8F | 70 | Press to decrease the volume. |
| Mute | 🔇 | Format 1 | 32 | CD | 52 | AD | Press to momentarily turn off / on the audio. |

# ADDITIONAL INFORMATION

| Key | | NEC format | Customer Code | | Key Code | | Description |
|---|---|---|---|---|---|---|---|
| | | | Byte 1 | Byte 2 | Byte 3 | Byte 4 | |
| Volume + | | Format 2 | 32 | CD | 8C | 73 | Press to increase the volume. |
| Freeze | | Format 1 | 32 | CD | 06 | F9 | Press to freeze the projector image. |
| Keystone | | Format 1 | 32 | CD | 7 | F8 | Press to adjust image distortion caused by tilting the projector. |
| AV Mute | | Format 1 | 32 | CD | 03 | FC | Press to hide / unhide the screen picture and turn off / on audio. |

# ADDITIONAL INFORMATION

## Troubleshooting

If you experience a problem with your projector, please refer to the following information. If a problem persists, please contact your local reseller or service center.

**Image problems**

*No image appears on-screen*

- Ensure all the cables and power connections are correctly and securely connected as described in the "Installation" section.
- Ensure the pins of connectors are not crooked or broken.
- Ensure that the "Mute" feature is not turned on.

*Image is out of focus*

- Turn the focus ring clockwise or counterclockwise until the image is sharp and legible. (Please see page *17)*.
- Make sure the projection screen is between the required distance from the projector. (Please refer to pages *46~47*).

*The image is stretched when displaying 16:9 DVD title*

- When you play anamorphic DVD or 16:9 DVD, the projector will show the best image in 16: 9 format on projector side.
- If you play the V-Stretch format DVD title, please change the format as V-Stretch in projector OSD.
- If you play 4:3 format DVD title, please change the format as 4:3 in projector OSD.
- Please setup the display format as 16:9 (wide) aspect ratio type on your DVD player.

*Image is too small or too large*

- Turn the zoom lever clockwise or counterclockwise to increase or decrease the projected image size. (Please see page *17)*.
- Move the projector closer to or further from the screen.
- Press "Menu" on the projector panel, go to "Display → Aspect Ratio". Try the different settings.

*Image has slanted sides:*

- If possible, reposition the projector so that it is centered on the screen and below the bottom of the screen.

*Image is reversed*

- Select "Display → Projection Orientation" from the OSD and adjust the projection direction.

# ADDITIONAL INFORMATION

### Other problems

*The projector stops responding to all controls*

- If possible, turn off the projector, then unplug the power cord and wait at least 20 seconds before reconnecting power.

### Remote control problems

*If the remote control does not work*

- Check the operating angle of the remote control is pointed within ±15° to the IR receiver on the projector.
- Make sure there are not any obstructions between the remote control and the projector. Move to within 6 m (19.7 ft) of the projector.
- Make sure batteries are inserted correctly.
- Replace batteries if they are exhausted.

# ADDITIONAL INFORMATION

## Warning indicators

When the warning indicators (see below) light up or flash, the projector will automatically shutdown:

- “Lamp” LED indicator is lit red and if “Power” indicator flashes red.
- “Temp” LED indicator is lit red and if “Power” indicator flashes red. This indicates the projector has overheated. Under normal conditions, the project can be switched back on.
- “Temp” LED indicator flashes red and if “Power” indicator flashes red.

Unplug the power cord from the projector, wait for 30 seconds and try again. If the warning indicator light up or flash, please contact your nearest service center for assistance.

### LED lightning messages

| Message | Power LED | | Temp LED | Lamp LED |
|---|---|---|---|---|
| | (Red) | (Blue) | (Red) | (Red) |
| Standby state (Input power cord) | Steady light | | | |
| Power on (Warming) | | Flashing (0.5 sec off / 0.5 sec on) | | |
| Power on and Lamp lighting | | Steady light | | |
| Power off (Cooling) | | Flashing (0.5 sec off / 0.5 sec on). Back to red steady light when cooling fan turns off. | | |
| Error (Lamp failure) | Flashing | | | Steady light |
| Error (Fan failure) | Flashing | | Flashing | |
| Error (Over temp.) | Flashing | | Steady light | |

- Power off:

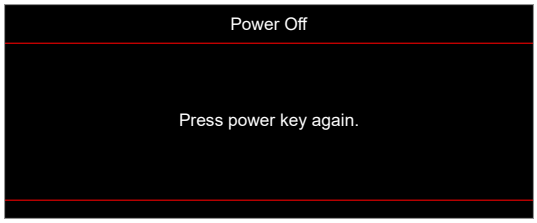


- Temperature warning:

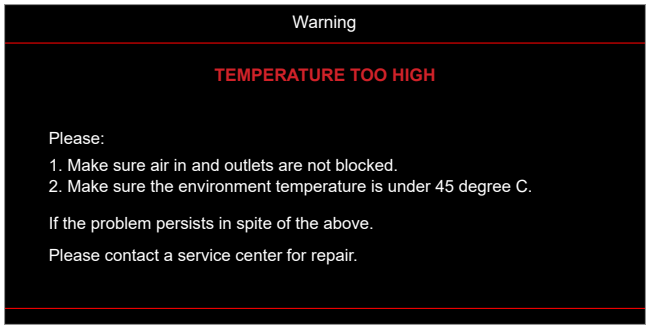

# ADDITIONAL INFORMATION

## Specifications

| Item | | Description |
|---|---|---|
| Technology | | • XGA: Texas Instrument DMD, 0.55" S450 DMD<br>• WXGA: Texas Instrument DMD, 0.65" S450 DMD<br>• 1080p: Texas Instrument DMD, 0.65" S600 DMD |
| Native Resolution | | • XGA: 1024 x 768<br>• WXGA: 1280 x 800<br>• 1080p: 1920 x 1080 |
| Lens | Throw ratio | • XGA: 1.94~2.16 (60"@2.37m)<br>• WXGA: 1.54~1.72 (60"@2.37m)<br>• 1080p: 1.48~1.62 (61"@2.0m) |
| | F-stop | • XGA/WXGA: 2.41~2.53<br>• 1080p: 2.5~2.67 |
| | Focal length | • XGA: 21.85~ 24.01mm<br>• WXGA: 21.85~ 24.00mm<br>• 1080p: 12.81~16.74mm |
| | Zoom range | 1.1x |
| Offset | | • XGA: 115% @60", tolerance ±5%<br>• WXGA: 100%~112% @60", tolerance ±5%<br>• 1080p: 100% ~116% @60", tolerance ±5% |
| Image size | | • XGA/WXGA: Optimized at 60” wide @2.37m<br>• 1080p: Optimized at 61” wide @2.0m |
| Projection distance | | • XGA: 1m to 11.8m mechanism travel, 1m to 10m optical optimized range<br>• WXGA: 1m to 10m mechanism travel, 1m to 10m optical optimized range<br>• 1080p: 0.8m to 10m mechanism travel, 1m to 5m optical optimized range |
| I/Os | | • HDMI 1 (HDMI 1.4b [XGA/WXGA model] / HDMI 2.0 [1080p model])<br>• HDMI 2 (HDCP 2.0 [XGA/WXGA model] / HDCP 2.2 [1080p model])<br>• USB Type-A for Power USB 5V/1.5A<br>• Audio Out 3.5mm<br>• RS232 |
| Colour | | 1073.4 Million color |
| Scan rate | | • Horizontal scan rate: 15KHz ~ 140KHz<br>• Vertical scan rate: 24Hz ~ 120Hz |
| Speaker | | 15W |
| Power consumption | | • ECO mode: 89W (typical) @110VAC; 887W @220VAC<br>• Bright mode: 140W (typical) @110VAC; 139W @220VAC |
| Input current | | DC 19.5V, 9.23A |
| Installation orientations | | Front, Rear, Ceiling, Rear-top |
| Dimensions (W x D x H) | | • Without feet: 274 x 216 x 108.5 mm<br>• With feet: 274 x 216 x 114 mm |
| Weight | | 3.0 ±0.2 kg |
| Environmental | | Operating in 0~40°C, 80% humidity (max., non-condensing) |

**Note:** *All specifications are subject to change without notice.*

# ADDITIONAL INFORMATION

## Optoma global offices

For service or support, please contact your local office.

### USA
Optoma Technology, Inc.
47697 Westinghouse Drive.
Fremont, Ca 94539

888-289-6786
510-897-8601
services@optoma.com

### Canada
Optoma Technology, Inc.
47697 Westinghouse Drive.
Fremont, Ca 94539

888-289-6786
510-897-8601
services@optoma.com

### Latin America
Optoma Technology, Inc.
47697 Westinghouse Drive.
Fremont, Ca 94539

888-289-6786
510-897-8601
services@optoma.com

### Europe
Unit 1, Network 41, Bourne End Mills
Hemel Hempstead, Herts,
HP1 2UJ, United Kingdom
www.optoma.eu
Service Tel : +44 (0)1923 691865

+44 (0) 1923 691 800
+44 (0) 1923 691 888
service@tsc-europe.com

### Benelux BV
Randstad 22-123
1316 BW Almere
The Netherlands
www.optoma.nl

+31 (0) 36 820 0252
+31 (0) 36 548 9052

### France
Bâtiment E
81-83 avenue Edouard Vaillant
92100 Boulogne Billancourt, France

+33 1 41 46 12 20
+33 1 41 46 94 35
savoptoma@optoma.fr

### Spain
C/ José Hierro,36 Of. 1C
28522 Rivas VaciaMadrid,
Spain

+34 91 499 06 06
+34 91 670 08 32

### Deutschland
Am Nordpark 3
41069 Mönchengladbach
Germany

+49 (0) 2161 68643 0
+49 (0) 2161 68643 99
info@optoma.de

### Scandinavia
Lerpeveien 25
3040 Drammen
Norway

+47 32 98 89 90
+47 32 98 89 99
info@optoma.no

PO.BOX 9515
3038 Drammen
Norway

### Korea
https://www.optoma.com/kr/

### Japan
https://www.optoma.com/jp/

### Taiwan
https://www.optoma.com/tw/

### China
Room 2001, 20F, Building 4,
No.1398 Kaixuan Road,
Changning District
Shanghai, 200052, China

+86-21-62947376
+86-21-62947375
www.optoma.com.cn

### Australia
https://www.optoma.com/au/