Western Digital.

Hard disk drive specifications

Ultrastar® DC HC550

3.5 inch Serial Attached SCSI hard disk drive

Model: WUH721818AL5200
WUH721818AL5201
WUH721818AL5204
WUH721818AL5205
WUH721816AL5201
WUH721816AL5204
WUH721816AL5205

Revision 1.4 18 June 2020

Publication Disclaimer Information

Western Digital Technologies, Inc. or its affiliates' (collectively "Western Digital") general policy does not recommend the use of its products in life support applications where in a failure or malfunction of the product may directly threaten life or injury. Per Western Digital Terms and Conditions of Sale, the user of Western Digital products in life support applications assumes all risk of such use and indemnifies Western Digital against all damages. This document is for information use only and is subject to change without prior notice. Western Digital assumes no responsibility for any errors that may appear in this document, nor for incidental or consequential damages resulting from the furnishing, performance or use of this material.

Absent a written agreement signed by Western Digital or its authorized representative to the contrary, Western Digital explicitly disclaims any express and implied warranties and indemnities of any kind that may, or could, be associated with this document and related material, and any user of this document or related material agrees to such disclaimer as a precondition to receipt and usage hereof.

Each user of this document or any product referred to herein expressly waives all guaranties and warranties of any kind associated with this document any related materials or such product, whether expressed or implied, including without limitation, any implied warranty of merchantability or fitness for a particular purpose or non-infringement. Each user of this document or any product referred to herein also expressly agrees Western Digital shall not be liable for any incidental, punitive, indirect, special, or consequential damages, including without limitation physical injury or death, property damage, lost data, loss of profits or costs of procurement of substitute goods, technology, or services, arising out of or related to this document, any related materials or any product referred to herein, regardless of whether such damages are based on tort, warranty, contract, or any other legal theory, even if advised of this possibility of such damages.

This document and its contents, including diagrams, schematics, methodology, work product, and intellectual property rights described in, associated with, or implied, by this document, are the sole and exclusive property of Western Digital. No intellectual property license, express or implied, is granted by Western Digital associated with the document recipient's receipt, access and/or use of this document or the products referred to herein; Western Digital retains all rights hereto.

Western Digital, the Western Digital logo and Ultrastar are registered trademarks or trademarks of Western Digital Corporation or its affiliates in the US and/or other countries. All other marks are the property of their respective owners.

© 2020 Western Digital Corporation or its affiliates. All rights reserved.

References in this publication to Western Digital-branded products, programs, or services do not imply that they will be made available in all countries. Product specifications provided are sample specifications and do not constitute a warranty. Actual specifications for unique part numbers may vary. Please visit the Support section of our website, westerndigital.com/support*, for additional information on product specifications. Pictures shown may vary from actual products.*

Table of contents

1 General 18
1.1 Introduction 18
1.2 Glossary 20
1.3 General caution 20
1.4 References 20
2 General features 21
Part 1. Functional specification 22
3 Fixed disk subsystem description 23
3.1 Control Electronics 23
3.2 Head disk assembly 23
3.3 Actuator 23
4 Drive characteristics 24
4.1 Default logical drive parameters 24
4.2 Data sheet 26
4.3 World Wide Name Assignment 26
4.4 Drive organization 26
4.4.1 Drive Format 26
4.4.2 Cylinder allocation 26
4.5 Performance characteristics 27
4.5.1 Mechanical positioning 27
4.5.2 Drive ready time 27
4.5.3 Operating modes 28
5 Defect flagging strategy 29
5.1 Shipped format 29
6 Specification 30
6.1 Electrical interface 30
6.1.1 Connector location 30
6.1.2 29 pin Serial Attached SCSI (SAS) Connector Definition 31
6.1.3 Voltage and Ground Signals 32
6.1.4 Ready LED output 32
6.2 Environment 33
6.2.1 Temperature and humidity 33
6.2.2 Storage Requirements 34
6.2.3 Corrosion test 34
6.2.4 Atmospheric condition 34
6.3 DC power requirements 35
6.3.1 Input voltage 35
6.3.2 Power supply current (typical[1]) 36
6.3.3 Power line noise limits 37
6.3.4 Power Consumption Efficiency 37
6.4 Reliability 38
6.4.1 Mean time between failures / Annualized failure rate 38
6.4.2 Data integrity 38
6.4.3 Cable noise interference 38
6.4.4 Load/Unload 38
6.4.5 Start/stop cycles 38
6.4.6 Preventive maintenance 38
6.4.7 Data reliability 38
6.4.8 Required Power-Off Sequence 38
6.5 Mechanical specifications 39
6.5.1 Physical dimensions 39
6.5.2 Connector locations 42

6.5.3 Drive mounting ... 42
6.5.4 Heads unload and actuator lock ... 42
6.6 Vibration and shock ... 43
6.6.1 Operating vibration ... 43
6.6.2 Nonoperating vibration ... 44
6.6.3 Operating shock ... 44
6.6.4 Nonoperating shock ... 44
6.6.5 Nonoperating Rotational shock ... 45
6.7 Acoustics ... 46
6.8 Identification labels ... 46
6.9 Safety ... 47
6.9.1 UL and CSA standard conformity ... 47
6.9.2 EU Safety standard conformity ... 47
6.9.3 Flammability ... 47
6.9.4 Safe handling ... 47
6.9.5 Substance restriction requirements ... 47
6.9.6 Secondary circuit protection ... 47
6.10 Electromagnetic compatibility ... 48
6.10.1 CE Mark ... 48
6.10.2 RCM Mark ... 48
6.10.3 BSMI Mark ... 48
6.10.4 KC Mark ... 48
6.11 Third Party Open Source Licenses ... 49
6.11.1 bzip2 ... 49
6.11.2 PCRE ... 50
Part 2. Interface specification ... 51
7 SAS Attachment ... 52
7.1 General ... 52
7.2 SAS Features ... 53
7.3 SAS Names and Identifiers ... 54
7.4 Spin up ... 55
7.5 PHY Layer ... 56
7.5.1 Link Reset Sequence ... 56
7.5.2 Hard Reset ... 57
7.5.3 SAS OOB (Out of Band) ... 57
7.5.4 SAS Speed Negotiation ... 58
7.5.5 PHY Error Handling ... 59
7.6 Link Layer ... 60
7.6.1 Address Frames ... 60
7.6.2 Link Layer Error Handling ... 64
7.7 Transport Layer ... 66
7.7.1 Command Information Unit ... 68
7.7.2 TASK Information Units ... 69
7.7.3 XFER_RDY Information Units ... 70
7.7.4 DATA Information Units ... 70
7.7.5 RESPONSE Information Units ... 71
7.7.6 Sequences of SSP Information Units ... 73
7.7.7 Transport Layer Error Handling ... 74
8 SCSI Command Set ... 75
8.1 SCSI Control Byte ... 77
8.2 Abbreviations ... 77
8.3 Byte ordering conventions ... 77
8.4 FORMAT UNIT (04) ... 78
8.4.1 Parameter List Header ... 80
8.4.2 Initialization Pattern ... 82

8.4.3 Defect Descriptor 83
8.5 GET PHYSICAL ELEMENT STATUS - (9E) 86
8.5.1 GET PHYSICAL ELEMENT STATUS command overview 86
8.5.2 GET PHYSICAL ELEMENT STATUS parameter data 88
8.6 INQUIRY (12) 91
8.6.1 Inquiry Data 92
8.7 LOG SELECT (4C) 114
8.8 LOG SENSE (4D) 117
8.8.1 Log Page parameters 118
8.8.2 Log Sense Page 0 119
8.8.3 Log Sense Page 2 120
8.8.4 Log Sense Page 3 121
8.8.5 Log Sense Page 5 122
8.8.6 Log Sense Page 6 123
8.8.7 Log Sense Page 8 124
8.8.8 Log Sense Page D 125
8.8.9 Log Sense Page E 126
8.8.10 Log Sense Page F 127
8.8.11 Log Sense Page 10 128
8.8.12 Log Sense Page 15 130
8.8.13 Log Sense Page 18 132
8.8.14 Log Sense Page 19h - General Statistics and Performance 136
8.8.15 Log Sense Page 1A 138
8.8.16 Log Sense Page 2F 139
8.8.17 Log Sense Page 30 140
8.8.18 Log Sense Page 37 142
8.9 MODE SELECT (6) - (15) 143
8.10 MODE SELECT (10) - (55) 144
8.11 MODE SENSE (6) - (1A) 145
8.11.1 Mode Parameter List 147
8.11.2 Mode Page 00 (Vendor Unique Parameters) 150
8.11.3 Mode Page 01 (Read/Write Error Recovery Parameters) 152
8.11.4 Mode Page 02 (Disconnect/Reconnect Parameters) 155
8.11.5 Mode Page 03 (Format Device Parameters) 156
8.11.6 Mode Page 04 (Rigid Disk Drive Geometry Parameters) 158
8.11.7 Mode Page 07 (Verify Error Recovery Parameters) 159
8.11.8 Mode Page 08 (Caching Parameters) 160
8.11.9 Mode Page 0A (Control Mode Page Parameters) 162
8.11.10 Mode Page 0C (Notch Parameters) 166
8.11.11 Mode Page 18h 167
8.11.12 Mode Page 19h (Port Control Parameters) 168
8.11.13 Mode Page 1A (Power Control) 175
8.11.14 Mode Page 1C (Informational Exceptions Control) 178
8.12 MODE SENSE (10) - (5A) 181
8.13 PERSISTENT RESERVE IN (5E) 182
8.13.1 Service Action 182
8.13.2 Parameter data for Read Keys 183
8.13.3 Parameter Data for Read Reservations 184
8.14 PERSISTENT RESERVE OUT (5F) 185
8.14.1 Service Action 185
8.14.2 Type 186
8.14.3 Parameter list 187
8.14.4 Summary 188
8.15 PRE-FETCH (10) - (34) 190

8.16 PRE-FETCH (16) - (90) ... 191
8.17 READ (6) - (08) ... 192
8.18 READ (10) - (28) ... 193
8.19 READ (12) - (A8) ... 195
8.20 READ (16) - (88) ... 196
8.21 READ (32) - (7F/09) ... 197
8.22 READ BUFFER (3C) ... 198
8.22.1 Combined Header And Data (Mode 00000b) ... 199
8.22.2 Read Data (Mode 00010b) ... 199
8.22.3 Descriptor (Mode 00011b) ... 200
8.22.4 Read Data from Echo Buffer (Mode 01010b) ... 200
8.22.5 Echo Buffer Descriptor (Mode 01011b) ... 201
8.22.6 Expander Communications and Echo Buffer (Mode 11010b) ... 201
8.22.7 Error History (Mode 11100b) ... 201
8.23 READ CAPACITY (10) - (25) ... 204
8.23.1 Returned Data Format ... 204
8.24 READ CAPACITY (16) (9E/10) ... 205
8.24.1 Returned Data Format ... 205
8.25 READ DEFECT DATA (10) - (37) ... 206
8.25.1 Defect List Header ... 207
8.25.2 Defect List Descriptor ... 207
8.25.3 Bytes from Index Format (100b) ... 207
8.25.4 Physical Sector Format (101b) ... 208
8.26 READ DEFECT DATA (12) - (B7) ... 209
8.26.1 Defect List Header ... 209
8.26.2 Defect List Descriptor ... 209
8.26.3 Bytes from Index Format (100b) ... 210
8.26.4 Physical Sector Format (101b) ... 210
8.27 READ LONG (10) - (3E) ... 211
8.28 READ LONG (16) - (9E) ... 212
8.29 REASSIGN BLOCKS (07) ... 213
8.30 RECEIVE DIAGNOSTICS RESULTS (1C) ... 214
8.30.1 Receive Diagnostic Results Page 0 ... 214
8.30.2 Receive Diagnostic Results Page 40 ... 215
8.31 RELEASE (6) - (17) ... 216
8.32 RELEASE (10) - (57) ... 217
8.33 REMOVE ELEMENT AND TRUNCATE - (9Eh) ... 218
8.34 REPORT DEVICE IDENTIFIER (A3/05) ... 220
8.35 REPORT LUNS (A0) ... 221
8.36 REPORT SUPPORTED OPERATION CODES (A3/0C) ... 223
8.36.1 All_commands parameter data format ... 225
8.36.2 One_command parameter data format ... 226
8.36.3 Command timeouts descriptor format ... 227
8.37 REPORT SUPPORTED TASK MANAGEMENT FUNCTIONS (A3/0D) ... 229
8.38 REQUEST SENSE (03) ... 231
8.39 RESERVE (6) - (16) ... 232
8.40 RESERVE (10) - (56) ... 233
8.41 REZERO UNIT (01) ... 234
8.42 SANITIZE (48) ... 235
8.42.1 Sanitize (48) Service Action Codes ... 236
8.43 SECURITY PROTOCOL IN (A2) ... 237
8.44 SECURITY PROTOCOL OUT (B5) ... 238
8.45 SEND DIAGNOSTIC (1D) ... 239
8.45.1 Send Diagnostic Page 0 ... 240

8.45.2 Send Diagnostic Page 3F ... 240
8.45.3 Send Diagnostic Page 40 ... 243
8.46 SET DEVICE IDENTIFIER (A4/06) ... 244
8.47 START STOP UNIT (1B) ... 245
8.48 SYNCHRONIZE CACHE (10) - (35) ... 247
8.49 SYNCHRONIZE CACHE (16) - (91) ... 248
8.50 TEST UNIT READY (00) ... 249
8.51 VERIFY (10) - (2F) ... 250
8.52 VERIFY (12) - (AF) ... 252
8.53 VERIFY (16) - (8F) ... 253
8.54 VERIFY (32) - (7F/0A) ... 254
8.55 WRITE (6) - (0A) ... 255
8.56 WRITE (10) - (2A) ... 256
8.57 WRITE (12) - (AA) ... 258
8.58 WRITE (16) - (8A) ... 259
8.59 WRITE (32) - (7F/0B) ... 260
8.60 WRITE AND VERIFY (10) - (2E) ... 261
8.61 WRITE AND VERIFY (12) - (AE) ... 262
8.62 WRITE AND VERIFY (16) - (8E) ... 263
8.63 WRITE AND VERIFY (32) - (7F/0C) ... 264
8.64 WRITE BUFFER (3B) ... 265
8.64.1 Combined Header And Data (Mode 00000b) ... 266
8.64.2 Write Data (Mode 00010b) ... 266
8.64.3 Download Microcode (Mode 00100b) ... 267
8.64.4 Download Microcode and save (Mode 00101b) -Single Binary File ... 267
8.64.5 Download Microcode with offsets, save, and activate (Mode 00111b) - Multiple Binary Files ... 268
8.64.6 Write Data to Echo Buffer (Mode 01010b) ... 268
8.64.7 Download microcode with offsets, select activation, save, and defer activate mode (Mode 01101b) ... 268
8.64.8 Download microcode with offsets, save, and defer activate (Mode 01110b) ... 269
8.64.9 Activate deferred microcode mode (Mode 01111b) ... 269
8.64.10 Enable Expander Communications Protocol (Mode 11010b) ... 269
8.65 WRITE LONG (10) - (3F) ... 270
8.66 WRITE LONG (16) - (9F/11) ... 272
8.67 WRITE SAME (10) - (41) ... 273
8.68 WRITE SAME (16) - (93) ... 274
8.69 WRITE SAME (32) - (7F/0D) ... 275
9 SCSI Status Byte ... 276
10 Additional information ... 277
10.1 SCSI Protocol ... 277
10.1.1 Priority of SCSI Status Byte Reporting ... 277
10.1.2 Invalid LUN Processing ... 277
10.1.3 Overlapped Commands ... 278
10.1.4 Command Processing During Execution of Active I/O Process ... 278
10.1.5 Unit Attention Condition ... 279
10.1.6 Command Processing During Startup and Format Operations ... 280
10.1.7 Internal Error Condition ... 281
10.1.8 Deferred Error Condition ... 282
10.1.9 Degraded Mode ... 282
10.1.10 Command Processing while Reserved ... 287
10.2 Priority Commands ... 288
10.3 Command Queuing ... 288
10.3.1 Queue Depth ... 288
10.3.2 Queue Full Status ... 288

10.3.3 Termination of I/O Processes ... 288
10.4 Command Reordering ... 289
10.5 Concurrent I/O Process ... 289
10.6 Write Cache ... 289
10.7 Automatic Rewrite/Reallocate ... 289
10.8 Segmented Catching ... 291
10.8.1 Overview ... 291
10.8.2 Read Ahead ... 291
10.9 Multiple Initiator Systems ... 291
10.9.1 Sense Data ... 291
10.9.2 Mode Pages ... 291
10.10 Multiple Initiator Environment ... 291
10.10.1 Initiator Sense Data ... 291
10.10.2 Initiator Mode Select/Mode Sense Parameters ... 291
10.11 Reset ... 292
10.11.1 Initiator Sense Data ... 292
10.11.2 Reset Actions ... 292
10.12 Diagnostics ... 293
10.12.1 Power on Diagnostics ... 293
10.12.2 Self-test via SEND DIAGNOSTIC Command ... 293
10.13 Idle Time Function ... 296
10.14 Command Time out Limits ... 296
10.14.1 Reassignment Time ... 296
10.14.2 Format Time ... 296
10.14.3 Start/Stop Unit Time ... 296
10.14.4 Medium Access Command Time ... 296
10.14.5 Time-out Limits for Other Commands ... 297
10.15 Recommended Initiator ERP ... 298
10.15.1 Drive Service Strategy ... 298
10.15.2 Recommendations for System Error Log ... 298
10.15.3 Data Recovery Procedure ... 299
10.15.4 Non data Error Recovery Procedure ... 301
10.16 RAID Rebuild Assist ... 307
10.16.1 Rebuild Assist diagnostic page ... 308
11 Firmware Security ... 309
11.1 Referenced Specifications and Standards ... 309
11.1.1 TCG Specifications ... 309
11.1.2 Federal Information Processing Standards (FIPS) ... 309
11.1.3 National Institute of Standards and Technology (NIST) ... 309
11.1.4 Department of Defense ... 310
11.1.5 RSA Laboratories Standards ... 310
11.1.6 Other Standards ... 310
11.2 Implementation Exceptions ... 310
11.3 Implementation Features and Details Outside of TCG Specifications ... 310
11.4 Encryption Algorithms ... 311
11.4.1 Advanced Encryption Standard (AES) Support ... 311
11.4.2 'Level 0 Discovery' Vendor Specific Data ... 311
11.4.3 Deterministic Random Bit Generation (DRBG) ... 312
11.4.4 Key Wrap ... 312
11.4.5 Key Erasure ... 312
11.5 TCG SSC Tables ... 313
11.5.1 'Admin SP' C_PIN and 'Locking SP' C_PIN Tables ... 313
11.5.2 K_AES_256 Table ... 313
11.5.3 'Locking SP' Access Control Table ... 314

11.5.4 'Locking Info' Table ... 314
11.5.5 'Locking SP' Locking Table ... 315
11.6 Firmware Download and Signing ... 316
11.7 Revert Feature ... 316
11.8 Ports ... 318
11.9 MSID ... 321
11.10 Logging ... 321
11.11 Number of Sessions ... 321
11.12 Number of Bands ... 321
11.13 Number of COMIDs ... 321
11.14 Locked and Unlocked Behavior ... 322
11.14.1 T10 SCSI Commands ... 322
11.14.2 TCG SSC Commands ... 324
11.15 Error Codes ... 326
11.16 Customer Specific Requirements ... 326
11.17 FIPS140 Cryptographic Officer Instructions ... 327
11.17.1 Physical Security ... 327
11.17.2 Security Protocol Parameters ... 327
11.17.3 Certified Models, Hardware Versions and Firmware Versions ... 332
11.17.4 Cryptographic Module Acceptance and Provisioning ... 332
11.17.5 Zeroization of the Cryptographic Module ... 332
11.18 Switching between TCG Enterprise and ISE model ... 333
11.19 Block SID Authentication ... 334
12 SCSI Sense Data ... 335
12.1 SCSI Sense Data Format Introduction ... 335
12.1.1 Sense Data Format ... 335
12.1.2 Sense Data Length ... 335
12.1.3 Sense Data Response Code ... 335
12.2 Fixed Format Sense Data ... 336
12.2.1 Valid (Bit 7 of byte 0) ... 336
12.2.2 Response Code (Bit 6 - 0 of byte 0) ... 336
12.2.3 ILI: Incorrect Length Indicator (Bit 5 of byte 2) ... 337
12.2.4 Sense Key (Bit 3 - 0 of byte 2) ... 337
12.2.5 Information Bytes (Byte 3 through 6) ... 338
12.2.6 Additional Sense Length (Byte 7) ... 338
12.2.7 Command Specific Information (Byte 8 through 11) ... 338
12.2.8 Additional Sense Code/Qualifier (Byte 12 and 13) ... 339
12.2.9 FRU: Field Replaceable Unit (Byte 14) ... 364
12.2.10 Sense Key Specific (Byte 15 through 17) ... 364
12.2.11 Reserved (Byte 18 through 19) ... 367
12.2.12 Vendor unique error information (Byte 20 through 23) ... 367
12.2.13 Physical Error Record (Product Specific Information) (Byte 24 thru 29) ... 367
12.3 Descriptor Format Sense Data ... 368
12.3.1 Order of Sense Descriptors ... 369
12.3.2 Sense Data Descriptor Definitions ... 369
13 Appendix. UEC list ... 373

List of tables

Table 1 Type and Model# 18
Table 2 Formatted capacity 24
Table 3 Data sheet 26
Table 4 World Wide Name Assignment 26
Table 5 Latency Time 27
Table 6 Drive ready time 27
Table 7 Mode transition times 28
Table 8 29-pin Connector Signal Definition 31
Table 9 Temperature and humidity 33
Table 10 Input voltage 35
Table 11 SAS power consumption 36
Table 12 Allowable power supply noise limits at drive power connector 37
Table 13 Power consumption efficiency 37
Table 14 Physical Dimensions 41
Table 15 Random vibration PSD profile break points (operating) 43
Table 16 Random vibration (Rotational) PSD profile break points 43
Table 17 Random vibration PSD profile break points (nonoperating) 44
Table 18 Sinusoidal shock wave 45
Table 19 Rotational Shock 45
Table 20 Sound power levels 46
Table 21 Names and identifiers 54
Table 22 IEEE Registered Name format 54
Table 23 Name Address Authority field 54
Table 24 SAS Speed Negotiation 58
Table 25 Supported Settings Bit Priorities 58
Table 26 PHY Layer Error Handling 59
Table 27 Address Frame Format 60
Table 28 Frame type: 60
Table 29 Identify Address Frame 61
Table 30 Power Capable field 62
Table 31 Reason field 62
Table 32 OPEN Address Frame format 63
Table 33 Link Layer Error Handling (part 1 of 2) 64
Table 34 Link Layer Error Handling (part 2 of 2) 65
Table 35 SAS Frame Format 66
Table 36 FRAME TYPE field 66
Table 37 COMMAND Information Unit 68
Table 38 TASK ATTRIBUTE field 68
Table 39 TASK Information Unit 69
Table 40 TASK MANAGEMENT FUNCTION field 69
Table 41 Additional Response Information argument for Query Async Event 70
Table 42 UADE DEPTH field 70
Table 43 XFER_RDY Information Unit 70
Table 44 Data Information Unit 70
Table 45 Response Information Unit 71
Table 46 RETRY DELAY TIMER field 71
Table 47 DATAPRES field 72
Table 48 RESPONSE CODE 72
Table 49 RESPONSE DATA 72
Table 50 Transport Layer Error Handling 74
Table 51 SCSI Commands Supported (part 1 of 2) 75

Table 52 SCSI Commands Supported (part 2 of 2) ... 76
Table 53 SCSI Control Byte ... 77
Table 54 Abbreviations ... 77
Table 55 FORMAT UNIT ... 78
Table 56 Defect descriptor format ... 78
Table 57 FFMT field description ... 79
Table 58 Format of the Short Parameter List Header ... 80
Table 59 Format of the Long Parameter List Header ... 80
Table 60 Format of the Long Parameter List Header ... 80
Table 61 Data Format with Protection field ... 81
Table 62 Initialization Pattern Descriptor ... 82
Table 63 Defect Descriptor - Block Format (for n + 1 defects) ... 83
Table 64 Defect Descriptor - Bytes from Index Format (for n = 1 defects) ... 84
Table 65 Defect Descriptor - Physical Sector Format (for n + 1 defects) ... 85
Table 66 GET PHYSICAL ELEMENT STATUS command ... 86
Table 67 FILTER field ... 86
Table 68 REPORT TYPE field ... 87
Table 69 GET PHYSICAL ELEMENT STATUS parameter data ... 88
Table 70 Physical Element Status descriptor format ... 89
Table 71 PHYSICAL ELEMENT TYPE field ... 89
Table 72 PHYSICAL ELEMENT HEALTH field ... 90
Table 73 INQUIRY (12) ... 91
Table 74 Page Code descriptions ... 91
Table 75 Inquiry Data- EVPD = 0 ... 92
Table 76 Inquiry Data - EVPD = 1 (Page Code = 00h) ... 94
Table 77 Inquiry Data - EVPD = 1 (Page Code = 03h) ... 95
Table 78 Operating State ... 96
Table 79 Functional Mode ... 96
Table 80 Code Mode ... 96
Table 81 Inquiry Data - EVPD = 1 (Page Code = 80h) ... 97
Table 82 Inquiry Data Format - EVPD = 1, (Page Code - 83h) (part 1 of 2) ... 98
Table 83 Inquiry Data Format - EVPD = 1, (Page Code - 83h) (part 2 of 2) ... 99
Table 84 Inquiry Data Format - EVPD = 1, (Page Code - 86h) ... 100
Table 85 Inquiry Data Format - EVPD = 1, (Page Code - 87h) ... 102
Table 86 Inquiry Data Format - EVPD = 1, (Page Code - 88h) ... 103
Table 87 Inquiry Data Format - EVPD = 1, (Page Code - 8Ah) ... 105
Table 88 Inquiry Data Format - EVPD = 1, (Page Code - 8Dh) ... 106
Table 89 Inquiry Data - EVPD = 1 (Page Code = 90h) ... 107
Table 90 Protocol-specific logical unit information descriptor ... 107
Table 91 Protocol Specific Port Information VPD page to SAS SSP ... 107
Table 92 Port Information Descriptor for SAS SSP ... 108
Table 93 SAS PHY Information Descriptor for SAS SSP ... 108
Table 94 Inquiry Data - EVPD = 1 (Page Code = B0h) ... 109
Table 95 Inquiry Data - EVPD = 1 (Page Code = B1h) ... 110
Table 96 Inquiry Data - EVPD = 1 (Page Code = B2h) ... 111
Table 97 Inquiry Data - EVPD = 1 (Page Code = D1h) ... 112
Table 98 Inquiry Data - EVPD = 1 (Page Code = D2h) ... 113
Table 99 Log Select (4C) ... 114
Table 100 Log Sense (4D) ... 117
Table 101 Log Sense Page 0 ... 119
Table 102 Log Sense Page 2 ... 120
Table 103 Log Sense Page 3 ... 121
Table 104 Log Sense Page 5 ... 122
Table 105 Log Sense Page 6 ... 123

Table 106 Log Sense Page 8 ... 124
Table 107 Log Sense Page D ... 125
Table 108 Log Sense Page E ... 126
Table 109 Log Sense Page F ... 127
Table 110 Log Sense Page F, Application Client Log ... 127
Table 111 Log Sense Page 10 ... 128
Table 112 Log Sense Page 10 parameter sructure ... 128
Table 113 Log Sense Page 10, self-test results ... 129
Table 114 Log Sense Page 10, Extended Segment Number ... 129
Table 115 Log Sense Page 15 ... 130
Table 116 BMS Status Parameter structure ... 130
Table 117 BMS Status ... 130
Table 118 Medium Scan Parameter structure ... 131
Table 119 Reassign Status ... 131
Table 120 Log Sense Page 18 ... 132
Table 121 SAS Log Descriptor (part 1 of 3) ... 132
Table 122 SAS Log Descriptor (part 2 of 3) ... 133
Table 123 SAS Log Descriptor (part 3 of 3) ... 134
Table 124 Log Sense Page 19h - General Statistics and Performance ... 136
Table 125 Time Interval Descriptor ... 137
Table 126 Log Sense Page 1A ... 138
Table 127 Log Sense Page 2F ... 139
Table 128 Log Sense Page 30 ... 140
Table 129 Log Sense Page 37 ... 142
Table 130 Mode Select (6) - (15) ... 143
Table 131 Save Pages ... 143
Table 132 Mode Select (10) - (55) ... 144
Table 133 MODE SENSE (6) - (1A) ... 145
Table 134 Page Code Usage ... 146
Table 135 Mode parameter header (6) ... 147
Table 136 Mode parameter header (10) ... 147
Table 137 Short LBA Mode Parameter Block Descriptor ... 148
Table 138 Long LBA Mode Parameter Block Descriptor ... 148
Table 139 Mode Parameter Page Format ... 149
Table 140 Mode Parameter Page Format ... 149
Table 141 Vendor Unique Parameters - Page 00 ... 150
Table 142 Mode Page 01 (Read/Write Error Recovery Parameters) ... 152
Table 143 PERDTEDCRTB (1/2) ... 153
Table 144 PERDTEDCRTB (2/2) ... 154
Table 145 Mode Page 02 (Disconnect/Reconnect Parameters) ... 155
Table 146 Mode Page 03 (Format Device Parameters) ... 156
Table 147 Mode Page 04 (Rigid Disk Drive Geometry Parameters) ... 158
Table 148 Mode Page 07 (Verify Error Recovery Parameters) ... 159
Table 149 Page 08 (Caching Parameters) ... 160
Table 150 Page 0A (Control Mode Page Parameters) ... 162
Table 151 Queue Error Management (QERR) field ... 163
Table 152 Control Extension Subpage ... 164
Table 153 Application Tag mode page: ... 165
Table 154 Application Tag descriptor format ... 165
Table 155 Page 0C (Notch Parameters) ... 166
Table 156 Page 18h (Protocol-Specific Logical Unit mode page) ... 167
Table 157 Short (Port Control Parameters) Format ... 168
Table 158 Long Format of Port Control Page ... 169
Table 159 PHY Control and Discover (Subpage 1) ... 170

Table 160 SAS PHY Mode Descriptor ... 171
Table 161 Shared Port Control (Subpage 2) ... 173
Table 162 Subpage 3 ... 174
Table 163 PHY Mode Descriptor (0 and 1) ... 174
Table 164 Page 1A (Power Control) ... 175
Table 165 PM_BG_PRECEDENCE field ... 177
Table 166 Page 1C (Informational Exceptions Control) ... 178
Table 167 Method of Reporting ... 179
Table 168 Background Control (Subpage 01h) ... 180
Table 169 MODE SENSE (10) - (5A) ... 181
Table 170 Persistent Reserve In (5E) ... 182
Table 171 PERSISTENT RESERVE IN, Service Action Codes ... 182
Table 172 PERSISTENT RESERVE IN, parameter data for Read Keys ... 183
Table 173 PERSISTENT RESERVE IN, parameter data for Read Reservations ... 184
Table 174 PERSISTENT RESERVE IN, Read Reservation Descriptor ... 184
Table 175 PERSISTENT RESERVE OUT (5F) ... 185
Table 176 PERSISTENT RESERVE OUT, Service Action Code ... 185
Table 177 PERSISTENT RESERVE OUT, Type Code ... 186
Table 178 Parameter List ... 187
Table 179 PERSISTENT RESERVO OUT specify initiator ports additional parameter data ... 188
Table 180 PERSISTENT RESERVE OUT, Service Action, Parameters ... 188
Table 181 APTPL and information held by a drive ... 189
Table 182 PRE-FETCH (10) - (34) ... 190
Table 183 PRE-FETCH (16) - (90) ... 191
Table 184 READ (6) - (08) ... 192
Table 185 READ (10) - (28) ... 193
Table 186 READ (12) - (A8) ... 195
Table 187 READ (16) - (88) ... 196
Table 188 READ (32) - (7F/09) ... 197
Table 189 READ BUFFER (3C) ... 198
Table 190 Mode ... 198
Table 191 Read Buffer Header ... 199
Table 192 Read Buffer Description ... 200
Table 193 Echo Buffer Descriptor ... 201
Table 194 Error History Buffer ID Field ... 201
Table 195 Error History Directory ... 202
Table 196 Error History Directory Entry ... 203
Table 197 READ CAPACITY (10) - (25) ... 204
Table 198 Format of READ CAPACITY command reply ... 204
Table 199 Read Capacity (16) (9E/10) ... 205
Table 200 Returned Data Format ... 205
Table 201 Protection Type (P_TYPE) field ... 205
Table 202 Logical Blocks per Physical Block Exponent field ... 205
Table 203 READ DEFECT DATA (10) - (37) ... 206
Table 204 Defect List Format ... 206
Table 205 Defect List Header ... 207
Table 206 Defect List Descriptor ... 207
Table 207 Defect Descriptors of Bytes from Index Format ... 207
Table 208 Defect Descriptors of Physical Sector Format ... 208
Table 209 READ DEFECT DATA (12) - (B7) ... 209
Table 210 Unit Defect List Header ... 209
Table 211 Defect List Descriptor ... 209
Table 212 Defect Descriptors of Bytes from Index Format ... 210
Table 213 Defect Descriptors of Physical Sector Format ... 210

Table 214 READ LONG (10) - (3E) 211
Table 215 READ LONG (16) - (9E) 212
Table 216 REASSIGN BLOCKS (07) 213
Table 217 Format of Reassign Blocks Parameter List data 213
Table 218 RECEIVE DIAGNOSTIC RESULTS (1C) 214
Table 219 Receive Diagnostic Results page 0 214
Table 220 Receive Diagnostic Results page 40 215
Table 221 Translated address 215
Table 222 RELEASE (6) - (17) 216
Table 223 RELEASE (10) - (57) 217
Table 224 REMOVE ELEMENT AND TRUNCATE command 218
Table 225 REPORT DEVICE IDENTIFIER (A3/05) 220
Table 226 Report Device Identifier parameter list 220
Table 227 REPORT LUNS (A0) 221
Table 228 Select Report field 221
Table 229 LUN Reporting parameter list format 222
Table 230 REPORT SUPPORTED OPERATION CODES (A3/0C) 223
Table 231 Reporting Options 223
Table 232 All_command parameter data format 225
Table 233 Command Descriptor format 225
Table 234 One_command parameter data format 226
Table 235 One_command parameter support field 226
Table 236 Command timeouts descriptor format 227
Table 237 Command timeouts descriptor Command Specific Field usage 227
Table 238 Report Supported Task Management Functions (A3/0D) 229
Table 239 Report Supported Task Management Functions - returned parameter data 229
Table 240 REQUEST SENSE (03) 231
Table 241 Sense Data Format and Length 231
Table 242 RESERVE (6) - (16) 232
Table 243 RESERVE (10) - (56) 233
Table 244 REZERO UNIT (01) 234
Table 245 SANITIZE (48) 235
Table 246 Immed 235
Table 247 SANITIZE Service Action Codes 236
Table 248 Parameter List Format for Overwrite Service Action 236
Table 249 SECURITY PROTOCOL IN (A2) 237
Table 250 SECURITY PROTOCOL field in SECURITY PROTOCOL IN command 237
Table 251 SECURITY PROTOCOL OUT (B5) 238
Table 252 SECURITY PROTOCOL field in SECURITY PROTOCOL OUT command 238
Table 253 SEND DIAGNOSTIC (1D) 239
Table 254 SEND DIAGNOSTIC Function Code (1D) 239
Table 255 Diagnostic page 0 240
Table 256 Diagnostic page 3F 240
Table 257 Phy Test Function 241
Table 258 Phy Test Pattern 241
Table 259 Phy Test Pattern SSC Code 242
Table 260 Phy Test Pattern Dwords Control 242
Table 261 Diagnostic Page 40 243
Table 262 Supplied Format 243
Table 263 Address to translate 243
Table 264 SET DEVICE IDENTIFIER (A4/06) 244
Table 265 SET DEVICE IDENTIFIER, Parameter List 244
Table 266 START STOP UNIT (1B) 245
Table 267 Immed 245

Table 268 Power Conditions 245
Table 269 Start bit 246
Table 270 SYNCHRONIZE CACHE (10) - (35) 247
Table 271 Synchronize Cache (16) - (91) 248
Table 272 TEST UNIT READY (00) 249
Table 273 VERIFY (10) - (2F) 250
Table 274 ByteChk 250
Table 275 VERIFY (12) - (AF) 252
Table 276 VERIFY (16) - (8F) 253
Table 277 VERIFY (32) - 7F/0A) 254
Table 278 WRITE (6) - (0A) 255
Table 279 WRITE (10) - (2A) 256
Table 280 WRITE (12) - (AA) 258
Table 281 WRITE(16)-(8A) 259
Table 282 WRITE (32) - (7F/0B) 260
Table 283 WRITE AND VERIFY (10) - (2E) 261
Table 284 WRITE AND VERIFY (12) - (AE) 262
Table 285 WRITE and VERIFY (16) - (8E) 263
Table 286 WRITE and VERIFY (32) - (7F/0C) 264
Table 287 WRITE BUFFER (3B) 265
Table 288 Mode 265
Table 289 Write Buffer Header 266
Table 290 WRITE LONG (10) - (3F) 270
Table 291 WRITE LONG (16) - (9F/11) 272
Table 292 WRITE SAME (10) - (41) 273
Table 293 WRITE SAME (16) - (93) 274
Table 294 WRITE SAME (32) - (7F/0D) 275
Table 295 Format of the SCSI STATUS byte. 276
Table 296 SCSI Status Byte 276
Table 297 Response 280
Table 298 Response 280
Table 299 Response 281
Table 300 Spindle Motor Degraded Mode - Disable Auto Start 283
Table 301 Spindle Motor Degraded Mode - Auto Start Delay/Spinning Up 283
Table 302 Spindle Motor Degraded Mode - Spindle Start Failure 284
Table 303 Spindle Motor Degraded Mode - Spindle Stopped by Command 285
Table 304 Self Configuration Failure Degraded Mode 286
Table 305 Format Command Failure Degraded Mode 287
Table 306 Sense data combinations with auto/recommend rewrite/reallocate 290
Table 307 Reset 292
Table 308 Short and Extended Self-Test Description 295
Table 309 Log Only Errors 300
Table 310 Rebuild Assist input diagnostic page 308
Table 311 Rebuild Assist output diagnostic page 308
Table 312 Persistent Reserve In (5E) 311
Table 313 WDC Default Values for 'Admin SP' C_PIN & 'Locking SP' C_PIN 313
Table 314 WDC Implementation of K_AES_256 Table 313
Table 315 WDC Implementation of 'Locking SP' Access Control Table 314
Table 316 WDC Implementation of 'Locking Info' Table 314
Table 317 WDC Implementation of 'Locking SP' Locking Table 315
Table 318 PSID Authority Added to 'Admin SP' Authority Table 316
Table 319 PSID Addition to 'Admin SP' C_PIN table 317
Table 320 Additions to 'Admin SP' Access Control Table 317
Table 321 Ports Functionality 318

Table 322 Ports Table ... 318
Table 323 Modified 'Admin SP' ACE Table ... 319
Table 324 Modified 'Admin SP' Access Control Table (part 1 of 2) ... 319
Table 325 Modified 'Admin SP' Access Control Table (part 2 of 2) ... 320
Table 326 T10 SCSI Commands Behavior Table (part 1 of 2) ... 322
Table 327 T10 SCSI Commands Behavior Table (part 2 of 2) ... 323
Table 328 TCG Enterprise SSC Commands Behavior -1 ... 324
Table 329 TCG Enterprise SSC Commands Behavior -2 ... 324
Table 330 TCG Enterprise SSC Commands Behavior -3 ... 324
Table 331 TCG Enterprise SSC Commands Behavior -4 ... 325
Table 332 TCG Enterprise SSC Commands Behavior -5 ... 325
Table 333 SECURITY PROTOCOL SPECIFIC Field for SECURITY PROTOCOL IN Protocol 00h ... 327
Table 334 Supported Security Protocols SECURITY PROTOCOL IN Parameter Data ... 328
Table 335 Certificate Data SECURITY PROTOCOL IN Parameter Data ... 328
Table 336 Security Compliance Information SECURITY PROTOCOL IN Parameter Data ... 329
Table 337 Compliance Descriptor Format ... 330
Table 338 COMPLIANCE DESCRIPTOR TYPE Field ... 330
Table 339 FIPS 140 Compliance Descriptor ... 330
Table 340 RELATED STANDARD Field ... 331
Table 341 Sense data response codes ... 335
Table 342 Fixed Format Sense Data ... 336
Table 343 Valid ... 336
Table 344 Response Code ... 336
Table 345 ILI ... 337
Table 346 Information Bytes (Byte 3 through 6) ... 338
Table 347 Sense Code/Qualifier ... 339
Table 348 Field Pointer Bytes ... 364
Table 349 Actual Retry Count ... 366
Table 350 Recovery Type ... 366
Table 351 Progress Indication ... 367
Table 352 Log Only Errors ... 367
Table 353 Descriptor Format Sense Data ... 368
Table 354 Sense Data Descriptor Format ... 368
Table 355 Supported Descriptor Types ... 368
Table 356 Sense Data Descriptor List ... 369
Table 357 Information Sense Data Descriptor Format ... 369
Table 358 Command-specific Sense Data Descriptor Format ... 370
Table 359 Information Sense Data Descriptor Format ... 370
Table 360 Field Replaceable Unit Sense Data Descriptor Format ... 371
Table 361 Block Command Sense Data Descriptor Format ... 371
Table 362 Vendor Unique Unit Error Code Sense Data Descriptor ... 372
Table 363 Vendor Unique Physical Error Record Sense Data Descriptor ... 372
Table 364 Unit Error Codes ... 373

List of figures

Figure 1 PList physical format 29
Figure 2 Connector location 30
Figure 3 SAS Connector 31
Figure 4 Limits of temperature and altitude 33
Figure 5 Limits of temperature and humidity 34
Figure 6 Top and side views and mechanical dimensions 39
Figure 7 Bottom and side views with mounting hole locations 40
Figure 8 Bottom and side views with mounting hole locations (FIPS model) 41
Figure 9 Connector locations 42
Figure 10 Spin up 55
Figure 11 Link Reset Sequence 56
Figure 12 SSP Information Unit Sequences 73

1 General

1.1 Introduction

This document describes the specifications of the Ultrastar® DC HC550 a WESTERN DIGITAL 3.5-inch 7200-rpm serial ATA / Serial Attached SCSI interface hard disk drive with the following model numbers:

Table 1 Type and Model#

(18TB)

Capacity	Type	Interface	Format	Model#	Description	P3 Power Disable Supported
18TB	US7SSR180	Serial Attached SCSI	512 Emulation	WUH721818AL5200	Instant Secure Erase	Yes
				WUH721818AL5201	SED*1	
				WUH721818AL5204	Base(SE)	
				WUH721818AL5205	SED-FIPS	

(16TB)

Capacity	Type	Interface	Format	Model#	Description	P3 Power Disable Supported
16TB	US7SSR160	Serial Attached SCSI	512 Emulation	WUH721816AL5201	SED*1	Yes
				WUH721816AL5204	Base(SE)	
				WUH721816AL5205	SED-FIPS	

*1 BDE+TCG w/ Instant Secure Erase

How to Read Model Numbers

WUH721818AL5204 – 18TB SAS 12Gb/s 512e Base (SE) with Pin 3 support

W = Western Digital
U = Ultrastar
H = Helium
72 = 7200 RPM
18 = Max capacity (18TB)
18 = Capacity this model (18TB)
A = Generation code
L = 26.1mm z-height
E6 = Interface (512e SATA 6Gb/s)
(52 = 512e SAS 12Gb/s)
** 512e models can be converted to 4Kn format and vice versa
y = Power Disable Pin 3 status
(0 = Power Disable Pin 3 support
L = Legacy Pin 3 config – No Power Disable Support)
z = Data Security Mode
0 = Instant Secure Erase
1 = SED*: Self-Encryption Drive
TCG-Enterprise and Sanitize Crypto Scramble / Erase
4 = Base (SE)*: No Encryption, Sanitize Overwrite only
5 = SED-FIPS: SED w/ certification (SAS only)

* ATA Security Feature Set comes standard on SATA
** See section **8.9 Mode Select & 8.11.1 Mode Parameter List**

One TB equals one trillion bytes when referring to storage capacity. Accessible capacity will vary from the stated capacity due to operating environment.

1.2 Glossary

ADM	Automatic Drive Maintenance
DFT	Drive Fitness Test
ESD	Electrostatic Discharge
GB	1,000,000,000 bytes(for Drive Capacity)
Gbps	1,000,000,000 bits per second
ISE	Instant Secure Erase
KB	1,024 bytes (for Memory Size)
Kbpi	1,000 bits per inch
Ktpi	1,000 tracks per inch
MB	1,048,576 bytes (for Memory Size)
MB/s	1,000,000 bytes per second
Mbps	1,000,000 bits per second
MiB/s	1,048,576 bytes per second
PI	Protection Information
PSID	Physical presence Security ID
S.M.A.R.T.	Self-Monitoring Analysis and Reporting Technology
SE	Secure Erase
SED	Self-Encrypting Drive
TB	1,000,000,000,000 bytes (for Drive Capacity)
TCG	Trusted Computing Group

1.3 General caution

Do not apply force to the top cover. Handle the drive by its edges or frame only.

Do not touch the interface connector pins or the surface of the print circuit board.

The drive can be damaged by shock or ESD (Electrostatic Discharge). Any damage sustained by the drive after removal from the shipping package and opening the ESD protective bag are the responsibility of the user.

1.4 References

- SAS Compliance : “Serial Attached Serial SCSI-3 (SAS-3)”
- SAS Protocol
  - This drive supports Serial SCSI Protocol (SSP)
  - STP (Tunneled SATA) and SMP (Management protocol) protocols are NOT supported

2 General features

- Data capacities of 18TB, 16TB
- Spindle speeds of 7200 RPM
- Fluid Dynamic Bearing motor
- Triple Stage Actuator
- Closed-loop actuator servo
- Load/Unload mechanism, non head disk contact start/stop
- Automatic Actuator lock
- Write Cache
- Power saving modes/Low RPM idle mode (APM)
- S.M.A.R.T. (Self Monitoring and Analysis Reporting Technology)
- Adaptive zone formatting
- RVS(Rotational Vibration Safeguard)
- Sector Buffer size of 512MiB
- Segmented buffer implementation
- Automatic Error Recovery procedures for read and write commands
- Automatic defect reallocation
- PSID support
- SAS Interface 12/6/3/1.5Gbps
- Dual-ported operations support
- Full duplex operations support
- Variable sector size (512-528 bytes in multiples of eight)
- Back to back write
- Self diagnostics at power on
- 64 bit addressing feature
- SAS-3 compliant
- ANSI T10 Protection Information (End-to-End)
- TCG Enterprise Encryption support (specific model only)
- FIPS 140-2, 180-4 and 197 support (specific models only)

Part 1. Functional specification

3 Fixed disk subsystem description

3.1 Control Electronics

The drive is electronically controlled by a microprocessor, several logic modules, digital/analog modules, and various drivers and receivers. The control electronics performs the following major functions:

- Controls and interprets all interface signals between the host controller and the drive.
- Controls read write accessing of the disk media, including defect management and error recovery.
- Controls starting, stopping, and monitoring of the spindle.
- Conducts a power-up sequence and calibrates the servo.
- Analyzes servo signals to provide closed loop control. These include position error signal and estimated velocity.
- Monitors the actuator position and determines the target track for a seek operation.
- Controls the voice coil motor driver to align the actuator in a desired position.
- Constantly monitors error conditions of the servo and takes corresponding action if an error occurs.
- Monitors various timers such as head settle and servo failure.
- Performs self-checkout (diagnostics).

3.2 Head disk assembly

The head disk assembly (HDA) is assembled in a clean room environment and contains the disks and actuator assembly. Helium is constantly circulated and filtered when the drive is operational. No venting of the HDA is accomplished, as HDA is hermetically sealed.

The spindle is driven directly by an in-hub, brushless, sensor less DC drive motor. Dynamic braking is used to quickly stop the spindle.

3.3 Actuator

The read/write heads are mounted in the actuator. The actuator is a swing-arm assembly driven by a voice coil motor. A closed-loop positioning servo controls the movement of the actuator. An embedded servo pattern supplies feedback to the positioning servo to keep the read/write heads centered over the desired track.

The actuator assembly is balanced to allow vertical or horizontal mounting without adjustment.

When the drive is powered off, the actuator automatically moves the head to the actuator ramp outside of the disk where it parks.

4 Drive characteristics

This section describes the characteristics of the drive.

4.1 Default logical drive parameters

The default of the logical drive parameters in Identify Device data is as shown below.

Table 2 Formatted capacity

(18TB)

Description	**18TB model**			
Physical Layout				
Label capacity	18TB			
Bytes per Sector	4,096	4,096+8*8PI	4,160	4,224
Number of Heads	18	18	18	18
Number of disks	9	9	9	9
Logical Layout[1]				
Bytes per Sector	512	512+8PI	520	528
Number of Sectors	35,156,656,128	34,441,527,296	34,441,527,296	33,919,336,448
Total Logical Data Bytes	18,000,207,937,536	17,909,594,193,920	17,909,594,193,920	17,909,409,644,544

Description	**18TB model**			
Physical Layout				
Label capacity	18TB			
Bytes per Sector	4,096	4,096 + 8PI	4,160	4,224
Number of Heads	18	18	18	18
Number of disks	9	9	9	9
Logical Layout[1]				
Bytes per Sector	4,096	4,096 + 8PI	4,160	4,224
Number of Sectors	4,394,582,016	4,363,911,168	4,305,190,912	4,239,917,056
Total Logical Data Bytes	18,000,207,937,536	17,909,491,433,472	17,909,594,193,920	17,909,409,644,544

(16TB)

Description	**16TB model**			
Physical Layout				
Label capacity	16TB			
Bytes per Sector	4,096	4,096+8*8PI	4,160	4,224
Number of Heads	18	18	18	18
Number of disks	9	9	9	9
Logical Layout[1]				
Bytes per Sector	512	512+8PI	520	528
Number of Sectors	31,251,759,104	30,616,322,048	30,616,322,048	30,152,851,456
Total Logical Data Bytes	16,000,900,661,248	15,920,487,464,960	15,920,487,464,960	15,920,705,568,768

Description	**16TB model**			
Physical Layout				
Label capacity	16TB			
Bytes per Sector	4,096	4,096 + 8PI	4,160	4,224
Number of Heads	18	18	18	18
Number of disks	9	9	9	9
Logical Layout[1]				
Bytes per Sector	4,096	4,096 + 8PI	4,160	4,224
Number of Sectors	3,906,469,888	3,879,206,912	3,827,040,256	3,769,106,432
Total Logical Data Bytes	16,000,900,661,248	15,920,265,166,848	15,920,487,464,960	15,920,705,568,768

Notes:

[1] Logical layout: Logical layout is an imaginary drive parameter (that is, the number of heads) which is used to access the drive from the system interface. The Logical layout to Physical layout (that is, the actual Head and Sectors) translation is done automatically in the drive. The default setting can be obtained by issuing an IDENTIFY DEVICE command

4.2 Data sheet

Table 3 Data sheet

Description	18TB Model	16TB Model
Max Data transfer rate (Mbps)	2,420	2,360
Max Interface transfer rate (MB/s)	1,200	1,200
Max Sustained transfer rate (MB/s)	269	262
Max Sustained transfer rate (MiB/s)	257	250
Data buffer size (MiB)	512	512
Rotational speed (RPM)	7,200	7,200
Recording density- max (Kbpi)	2,157	2,015
Track density (Ktpi)	470	450
Areal density - max (Gbits/in^2)	1,022	918

4.3 World Wide Name Assignment

Table 4 World Wide Name Assignment

Description	WWN
Organizationally Unique Identifier(OUI)	000CCAh (for WESTERN DIGITAL)
SHBU Block Assignment	284h,285h,286h,295h,29Dh,29Eh,29Fh,2A0h,2A1h (Thailand)

4.4 Drive organization

4.4.1 Drive Format

Upon shipment from WESTERN DIGITAL manufacturing the drive satisfies the sector continuity in the physical format by means of the defect flagging strategy described in Section 5 on page 29 in order to provide the maximum performance to users.

4.4.2 Cylinder allocation

Physical cylinder is calculated from the starting data track of 0. It is not relevant to logical CHS. Depending on the capacity some of the inner zone cylinders are not allocated.

Data cylinder
This cylinder contains the user data which can be sent and retrieved via read/write commands and a spare area for reassigned data.

Spare cylinder
The spare cylinder is used by WESTERN DIGITAL manufacturing and includes data sent from a defect location.

4.5 Performance characteristics

Drive performance is characterized by the following parameters:

- Command overhead
- Mechanical positioning
  - Latency
- Data transfer speed
- Buffering operation (Look ahead/Write cache)

All the above parameters contribute to drive performance. There are other parameters that contribute to the performance of the actual system. This specification defines the characteristics of the drive, not the characteristics of the system throughput which depends on the system and the application.

The terms “Typical” and “Max” are used throughout this specification with the following meanings:

Typical. The average of the drive population tested at nominal environmental and voltage conditions.

Max. The maximum value measured on any one drive over the full range of the environmental and voltage conditions. (See Section 6.2, “Environment” and Section 6.3, “DC Power Requirements”)

4.5.1 Mechanical positioning

4.5.1.1 Average latency

Table 5 Latency Time

Rotational speed	Time for a revolution (ms)	Average latency (ms)
7200 RPM	8.3	4.16

4.5.2 Drive ready time

Table 6 Drive ready time

Power on to ready	Typical (sec)	Maximum (sec)
9 Disk model	25	30

Ready The condition in which the drive is able to perform a media access command (such as read, write) immediately

Power on This includes the time required for the internal self diagnostics.

Notes*: The typical and maximum drive ready time in the table are for proper power shutdown using the Required Power-Off Sequence. In the event of an EPO (Emergency Power Off), the drive ready times in the table can be exceeded by as much as 2s-4s. The additional time is used to condition the drive for user data access. The actual time may vary depending on the drive pre-condition before the EPO event.*

4.5.3 Operating modes

4.5.3.1 Operating mode descriptions

Operating mode	Description
Spin up	Period of time from 0 rpm to full rpm
Start up	Period of time from power on to drive ready.
Seek	Seek operation mode
Write	Write operation mode
Read	Read operation mode
Active	Drive is able to perform a media access command (such as read, write) immediately
Idle_0	Drive Ready, but not performing IO, drive may power down selected electronics to reduce power without increasing response time
Idle_A	Drive Ready, but not performing IO, drive may power down selected electronics to reduce power without increasing response time
Idle_B	Spindle rotation at 7200 RPM with heads unloaded
Idle_C/Standby_Y	Spindle rotation at Low RPM with heads unloaded
Standby_Z	Actuator is unloaded and spindle motor is stopped. Commands can be received immediately
Sleep (SATA)	Actuator is unloaded and spindle motor is stopped. Only soft reset or hard reset can change the mode to standby_z

Note: Upon power down or spindle stop a head locking mechanism will secure the heads in the OD parking position.

4.5.3.2 Mode transition times

Mode transition times are shown below

Table 7 Mode transition times

From	To	RPM	Typical (sec)
Idle_B	Active	7200	1.5
Idle_C	Active	6300 -> 7200	4
Standby_Y	Active	6300 -> 7200	4
Standby_Z	Active	0 > 7200	15

Note: Maximum transition time of 30 Seconds based on drive timeout value

5 Defect flagging strategy

Media defects are remapped to the next available sector during the Format Process in manufacturing. The mapping from LBA to the physical locations is calculated by an internally maintained table.

5.1 Shipped format

- Data areas are optimally used.
- No extra sector is wasted as a spare throughout user data areas.
- All pushes generated by defects are absorbed by the spare tracks of the inner zone.

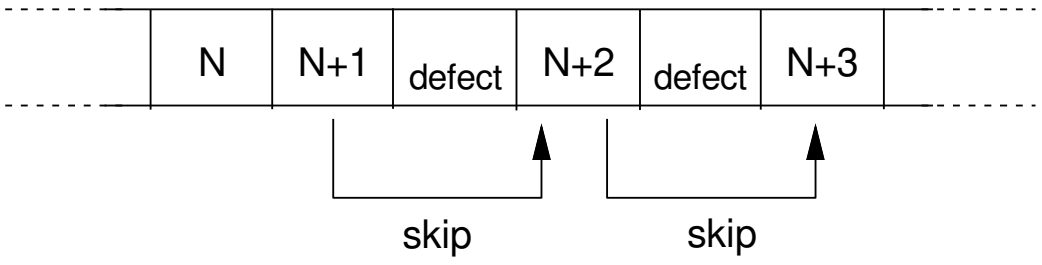

Figure 1 PList physical format

Defects are skipped without any constraint, such as track or cylinder boundary. The calculation from LBA to physical is done automatically by internal table.

6 Specification

6.1 Electrical interface

6.1.1 Connector location

Refer to the following illustration to see the location of the connectors.

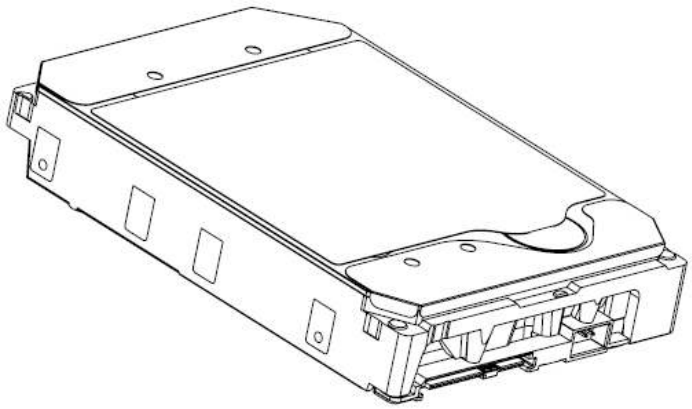

Figure 2 Connector location

6.1.1.1 Signal connector

The drive uses the standard 29 pin Serial Attached SCSI (SAS) connector which conforms to the mechanical requirements of SFF 8680. The connector is expected to be used in an environment which uses a common connector structure for racking disk drives in a cabinet. The connector allows for plugging a drive directly into a backplane by providing the necessary electrical connection. Mechanical stability and device retention must be provided by a mechanism outside the drive.

6.1.2 29 pin Serial Attached SCSI (SAS) Connector Definition

Diagram of top and bottom of connector showing pin outs.

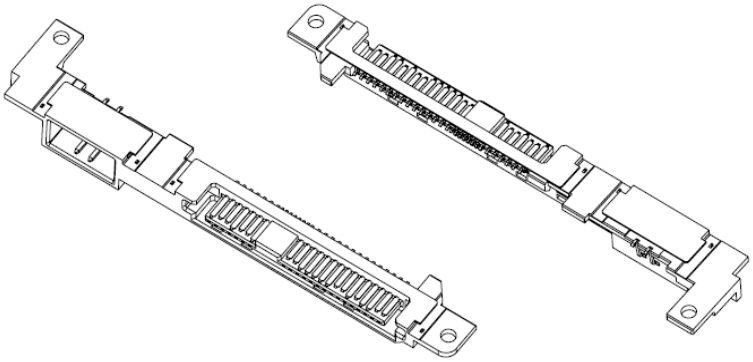

Figure 3 SAS Connector

Table 8 29-pin Connector Signal Definition

Pin No.	Signal	Description
S1	GND	GND for SAS Primary Port
S2	RP+	SAS Primary Port Receive (Positive) signal
S3	RP-	SAS Primary Port Receive (Negative) signal
S4	GND	GND for SAS Primary Port
S5	TP-	SAS Primary Port Transmit (Negative) signal
S6	TP+	SAS Primary Port Transmit (Positive) signal
S7	GND	GND for SAS Primary Port
S8	GND	GND for SAS Secondary Port
S9	RS+	SAS Secondary Port Receive (Positive) signal
S10	RS-	SAS Secondary Port Receive (Negative) signal
S11	GND	GND for SAS Secondary Port
S12	TS-	SAS Secondary Port Transmit (Negative) signal
S13	TS+	SAS Secondary Port Transmit (Positive) signal
S14	GND	GND for SAS Secondary Port
P1	Reserved	NOT USED (P1 and P2 tied internally)
P2	Reserved	NOT USED (P1 and P2 tied internally)
P3	Power Disable	Enter/Exit Power Disable
P4	GND	GROUND
P5	GND	GROUND
P6	GND	GROUND
P7	+5V-Charge	Pre-charge pin for +5V
P8	+5V	+5V power supply input
P9	+5V	+5V power supply input
P10	GND	GROUND
P11	READY LED	READY LED output
P12	GND	GROUND
P13	+12V=Charge	Pre-charge pin for +12V
P14	+12V	+12V power supply input
P15	+12V	+12V power supply input

6.1.3 Voltage and Ground Signals

The 12V and 5V contacts provide all of the voltages required by the drive. The two voltages share a common ground plane to which all of the ground contacts are connected.

6.1.4 Ready LED output

The drive provides an open-drain driver with 15mA of current sink capability to the Ready LED Output signal. The cathode of the LED should be connected to this signal. The LED and the current-limiting resistor must be provided by the enclosure

6.2 Environment

6.2.1 Temperature and humidity

Table 9 Temperature and humidity

System Responsibility	
The system is responsible for maintaining a drive sensor temperature below 65C. Drive sensor temperature is as reported using Log Sense page 0xD.	
Operating ambient conditions	
Temperature Relative humidity Maximum wet bulb temperature Maximum temperature gradient Altitude	5 to 60°C 8 to 90% non-condensing 29.4°C non-condensing 20°C/Hour –300 to 3,048 m
Non-Operating conditions	
Temperature Relative humidity Maximum wet bulb temperature Maximum temperature gradient Altitude	-40 to 70°C (Storage 0 to 70°C) 5 to 95% non-condensing 35°C non-condensing 30°C/Hour –300 to 12,000 m (Inside dashed-dotted line of Figure 4)

Notes:

1. *Non condensing conditions should be maintained at any time.*

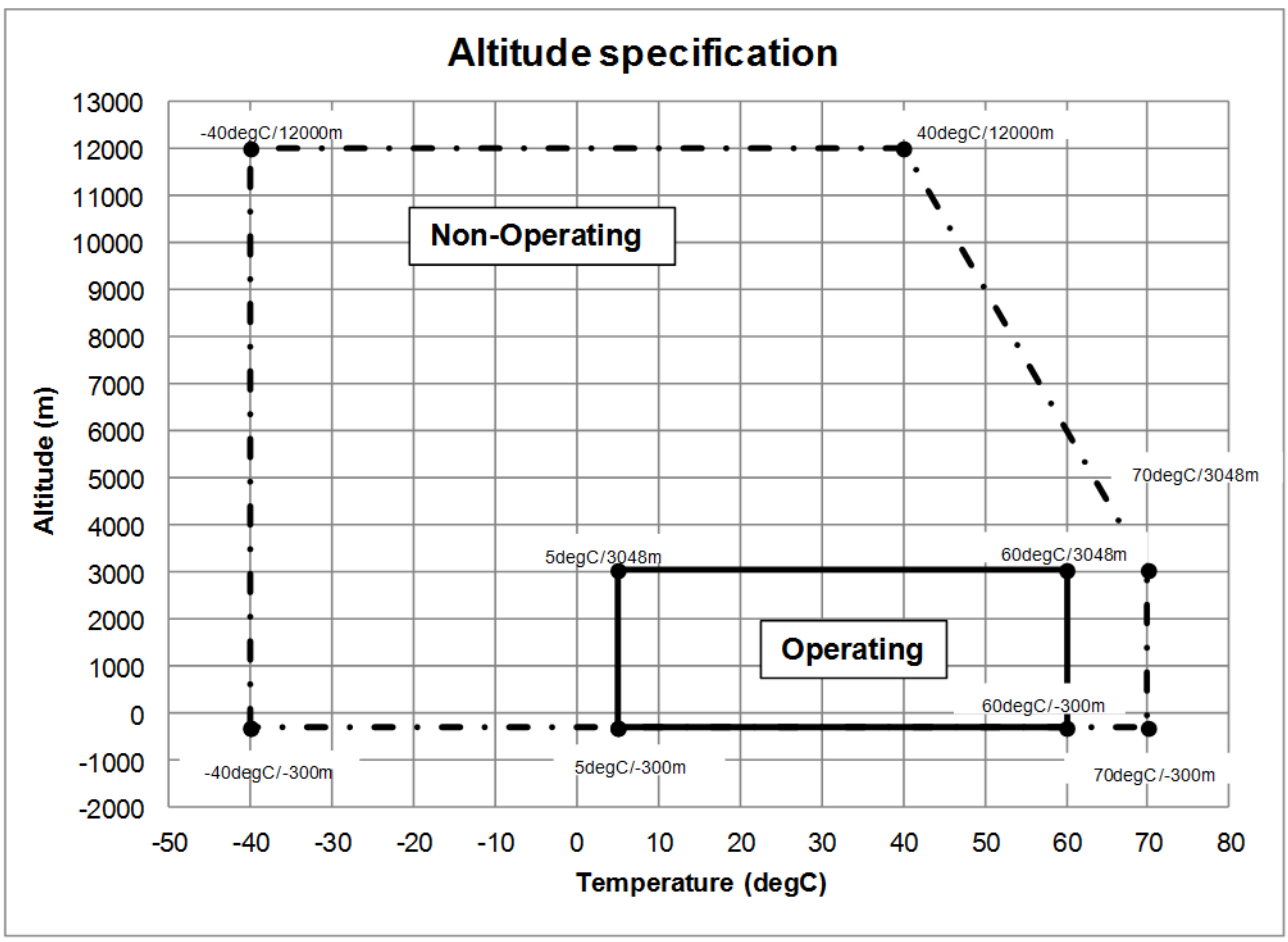

Figure 4 Limits of temperature and altitude

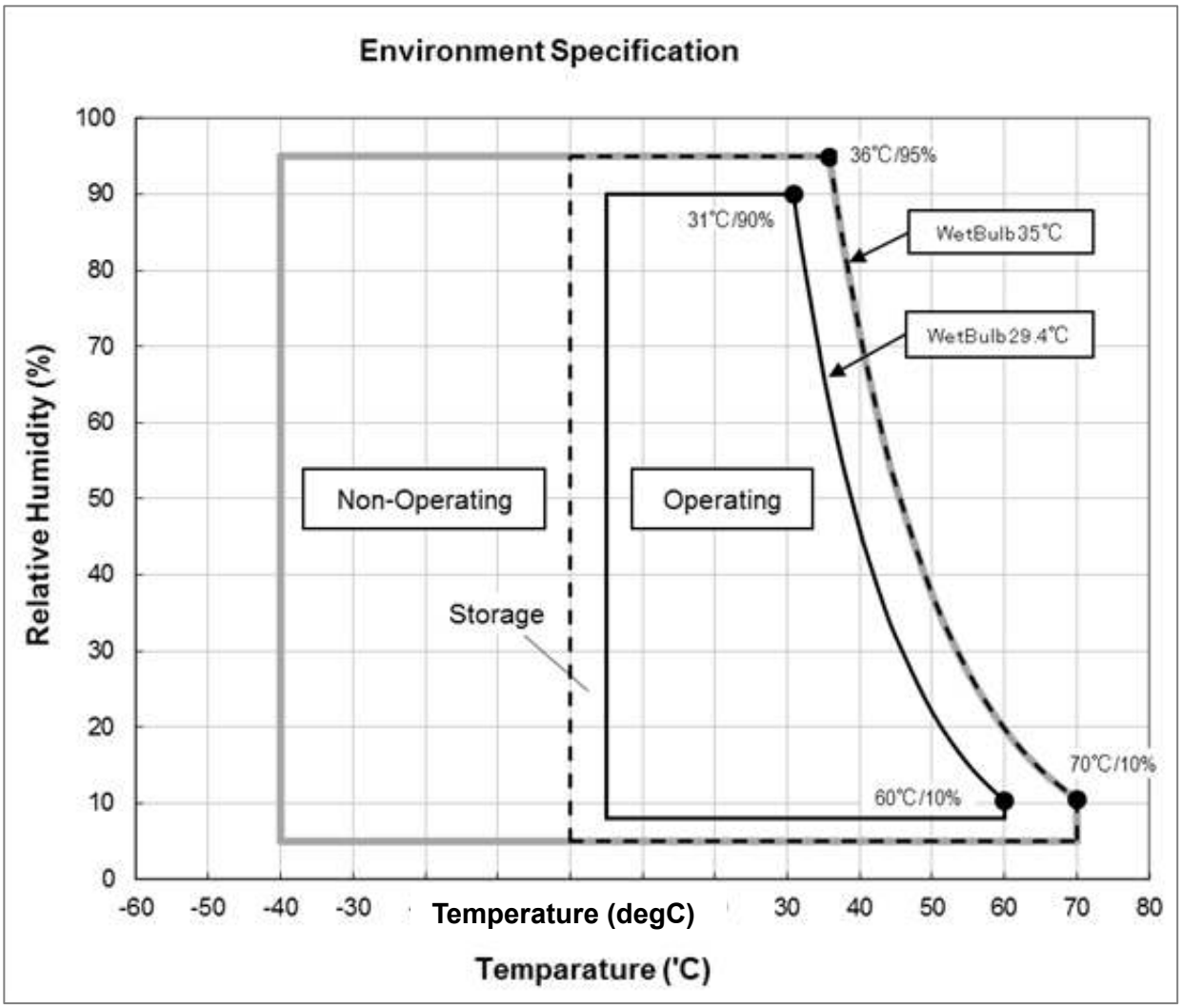

Figure 5 Limits of temperature and humidity

6.2.2 Storage Requirements

6.2.2.1 Packaging

The drive or option kit must be heat-sealed in a moisture barrier bag with bag supplied by WESTERN DIGITAL.

6.2.2.2 Storage Time

The drive may not remain inoperative for a period of more than one year whether or not the original shipping package is opened.

6.2.3 Corrosion test

The drive shows no sign of corrosion inside and outside of the hard disk assembly and is functional after being subjected to seven days at 50°C with 90% relative humidity.

6.2.4 Atmospheric condition

Environments that contain elevated levels of corrosives (e.g. hydrogen sulfide, sulfur oxides, or hydrochloric acid) should be avoided. Care must be taken to avoid using any compound/material in a way that creates an elevated level of corrosive materials in the atmosphere surrounding the disk drive. Care must also be taken to avoid use of any organometallic (e.g. organosilicon or organotin) compound/material in a way that creates elevated vapor levels of these compounds/materials in the atmosphere surrounding the disk drive.

6.3 DC power requirements

The following voltage specification applies at the drive power connector. Connections to the drive should be made in a safety extra low voltage (SELV) circuit. There is no power on or power off sequencing requirement.
Adequate secondary over-current protection is the responsibility of the system.

6.3.1 Input voltage

Table 10 Input voltage

Input voltage	During run and spin up	Absolute max spike voltage	Supply rise time
+5 Volts Supply	5V ± 5%	–0.3 to 5.5V	0 to 200ms
+12 Volts Supply	12V ± 5%	–0.3 to 15.0V	0 to 400ms

Caution: To avoid damage to the drive electronics, power supply voltage spikes must not exceed specifications.

6.3.2 Power supply current (typical[1])

Table 11 SAS power consumption

Serial Attached SCSI @ 12Gb/sec — 16TB/18TB Model

	IO/Sec	+5V Current (Amp)	+12V Current (Amp)	Power (Watts)
Max Peak Operational [4]		0.95	2.00	
Start up Peak DC [1]		0.80	1.80	
Start up Peak AC		0.90	2.00	
Idle_0 Ave.		0.41	0.32	5.8
Idle Ripple		0.10	0.10	
Random RW 50/50 4KB Qd=4 Peak [4]		0.85	1.90	
Random RW 50/50 4KB Qd=4 Ave.	219	0.44	0.55	8.8
Random RW 70/30 4KB Qd=4 Peak [4]		0.80	1.90	
Random RW 70/30 4KB Qd=4 Ave.	163	0.43	0.52	8.4
Random RW 50/50 4KB Qd=1 Peak [4]		0.80	1.90	
Random RW 50/50 4KB Qd=1 Ave.	154	0.44	0.52	8.5
Random RW 70/30 4KB Qd=1 Peak [4]		0.80	1.90	
Random RW 70/30 4KB Qd=1 Ave.	163	0.43	0.52	8.4
Random Read 4KB Qd=8 Peak [4]		0.80	1.90	
Random Read 4KB Qd=8 Ave.	147	0.43	0.59	9.3
Max Power Workload [5]				
64K_ranrw_1 WCE=1		0.90	1.95	
64K_ranrw_1 WCE=1	148	0.46	0.61	9.7
Sequential Read Peak [4]	MiBS [6]	0.90		
Sequential Read Ave. [2]	250/257	0.75	0.33	7.7
Sequential Write Peak [4]		0.75		
Sequential Write Ave. [2]	250/257	0.64	0.38	7.7

Power Save Mode	Current (Amp)	Current (Amp)	Power (Watts)	Saved (Watts) [3]
Idle_A	0.41	0.32	5.8	0.0
Idle_B	0.26	0.21	3.8	2.0
Idle_C	0.26	0.17	3.3	2.5
Standby_Y	0.26	0.17	3.3	2.5
Standby_Z	0.2	0.0	1.3	4.5

Notes

Sample size	6 HDD per model
Temperature	DE temperature = 40degC (25degC for Spin up)
Write Cache Enable	Off
Bandwidth	All measurements are bandwidth limited to 20MHz
PHY	Dual port, 12Gb/s

[1] 200mS windowed average
[2] Max transfer rate
[3] Power saved compared to Idle_0
[4] Maximum single peak in test samples
[5] Maximum power workload
[6] Indicates 16TB/18TB Throughput rates

6.3.3 Power line noise limits

Table 12 Allowable power supply noise limits at drive power connector

	Noise Voltage (mV pp)	**Frequency Range**
+5V DC	250	100Hz-20MHz
+12V DC	800	100Hz-8KHz
	450	8KHz-100KHz
	250	100KHz-20MHz

During drive operation, both 5 and 12-volt ripple are generated by the drive due to dynamic loading of the power supply. This voltage ripple will add to existing power supply voltage ripple. The sum is the power line noise.

To prevent significant performance loss, the power line noise level when measured at the drive power connector should be kept below the limits in the above table.

6.3.4 Power Consumption Efficiency

Table 13 Power consumption efficiency

Power Consumption Efficiency at Idle	**SAS**
W/TB	0.32
W/GB	0.00032

6.4 Reliability

6.4.1 Mean time between failures / Annualized failure rate

2.5M hour MTBF / 0.35% AFR (projected) rating, MTBF and AFR specifications are based on a sample population and are estimated by statistical measurements and acceleration algorithms under typical operating conditions, workload 220TB/year and temperature 40C. Derating of MTBF and AFR will occur above these parameters, up to 550TB writes per year and 60C ambient (65C device temp). MTBF and AFR ratings do not predict an individual drive's reliability and do not constitute a warranty.

6.4.2 Data integrity

When the write cache option is disabled, no customer data is lost during power loss. If the write cache option is active or has been recently used, some data loss can occur during power loss. To prevent the loss of data at power off; confirm the successful completion of a SYNCHONIZE CACHE (35h) command.

6.4.3 Cable noise interference

To avoid any degradation of performance throughput or error rate when the interface cable is routed on top or comes in contact with the HDA assembly, the drive must be grounded electrically to the system frame by four screws. The common mode noise or voltage level difference between the system frame and power cable ground or AT interface cable ground should be in the allowable level specified in the power requirement section.

6.4.4 Load/Unload

The product supports a minimum of 600,000 normal load/unloads in a 40° C environment.
Load/unload is invoked by transition of the HDD's power mode. (Chapter 4.5.4 Operating modes)

Idle (Idle_A) <-> unload idle (Idle_B)

Idle (Idle_A) <-> Low rpm idle (Idle_C)

6.4.5 Start/stop cycles

The drive withstands a minimum of 50,000 start/stop cycles in a 40° C environment and a minimum of 10,000 start/stop cycles in extreme temperature or humidity within the operating range.

6.4.6 Preventive maintenance

None

6.4.7 Data reliability

Probability of not recovering data is 1 in 10^{15} bits read.

LDPC on the fly/ offline data correction

- 4608 bit LDPC
- This implementation recovers maximum 2500 bits single burst error by on the fly correction and maximum 3500 bits single burst error by offline correction

6.4.8 Required Power-Off Sequence

The required sequence for removing power from the drive is as follows:

Step 1: Issue a STOP UNIT Command.

Step 2: Wait until the Command Complete status is returned. However, the time out value needs to be 60 seconds considering error recovery time.

Step 3: Terminate power to HDD.

6.5 Mechanical specifications

6.5.1 Physical dimensions

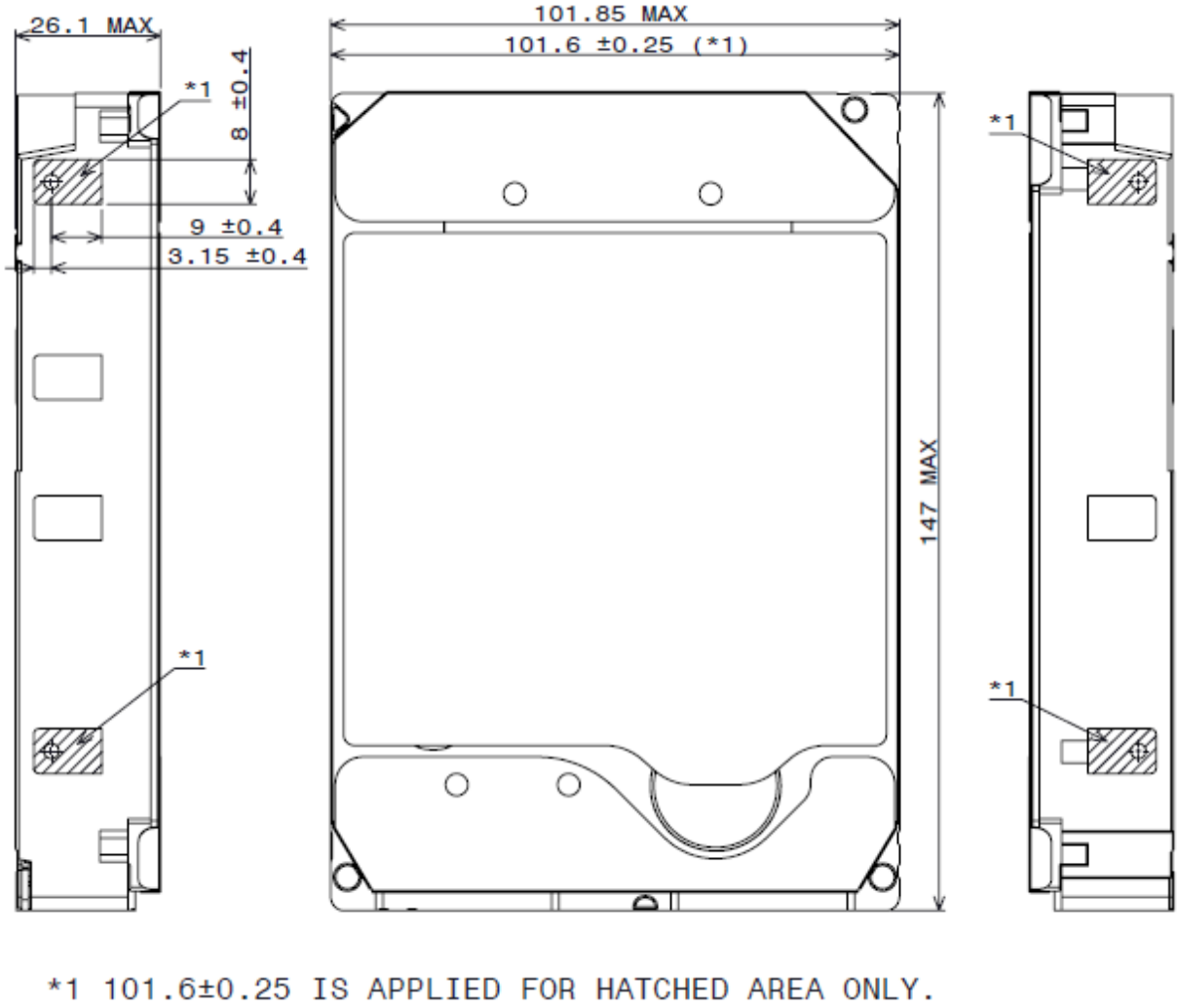

Figure 6 Top and side views and mechanical dimensions

All dimensions are in millimeters.

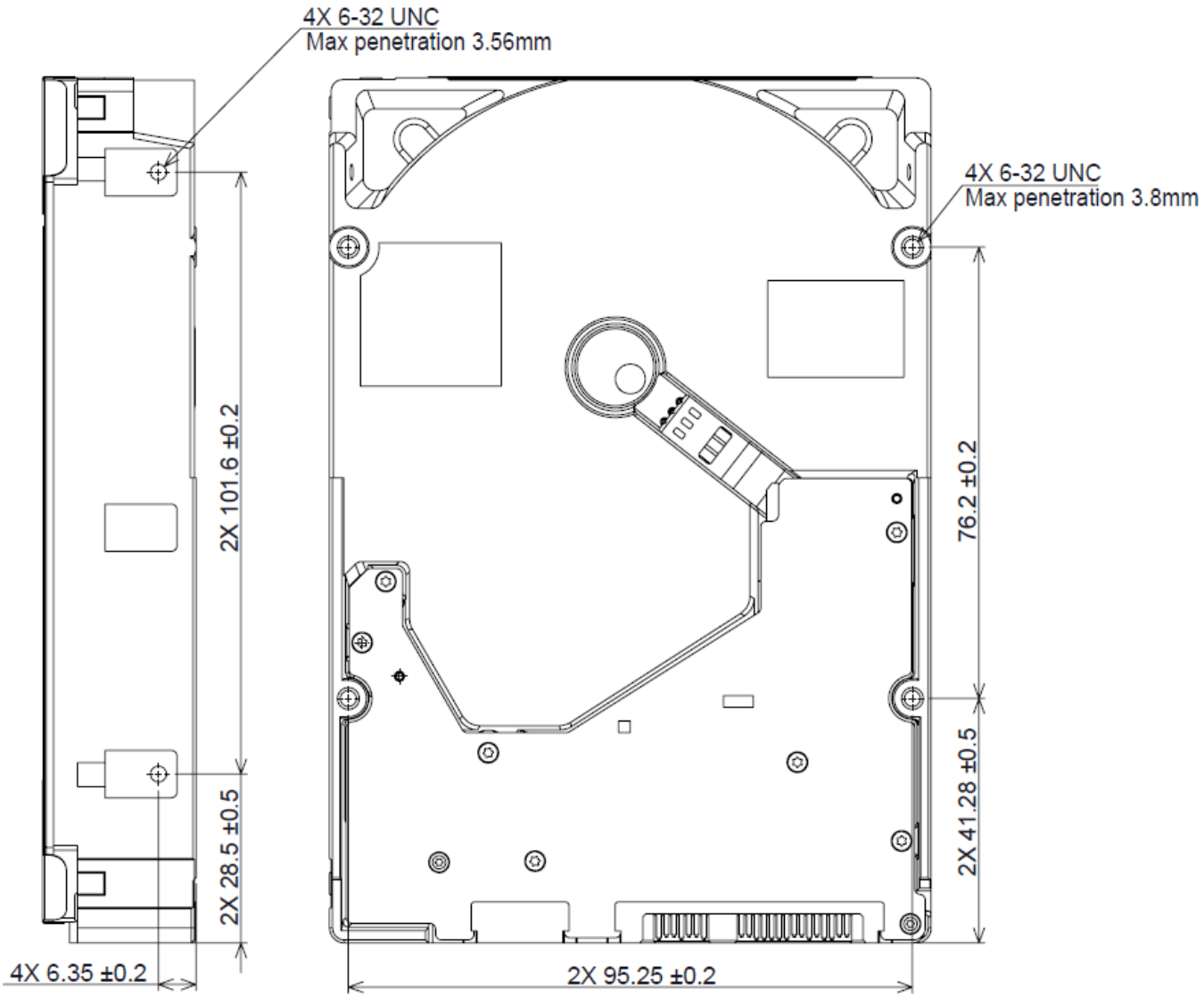

Figure 7 Bottom and side views with mounting hole locations

All dimensions in the above figure are in millimeters.

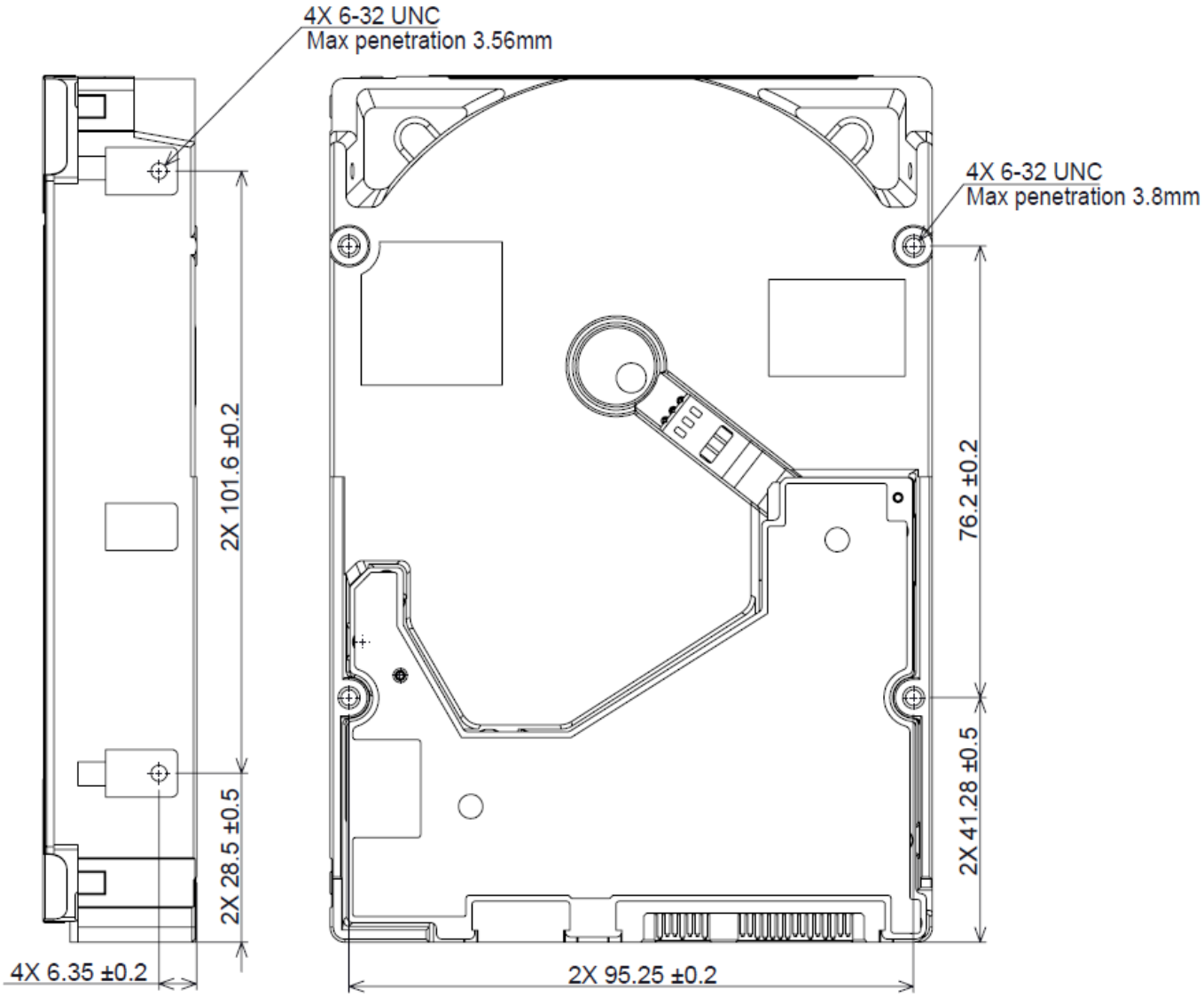

Figure 8 Bottom and side views with mounting hole locations (FIPS model)

All dimensions in the above figure are in millimeters.

The following table shows the physical dimensions of the drive.

Table 14 Physical Dimensions

Height (mm)	Width (mm)	Length (mm)	Weight (grams)
26.1 MAX	101.6 ± 0.25	147 MAX	690 MAX

6.5.2 Connector locations

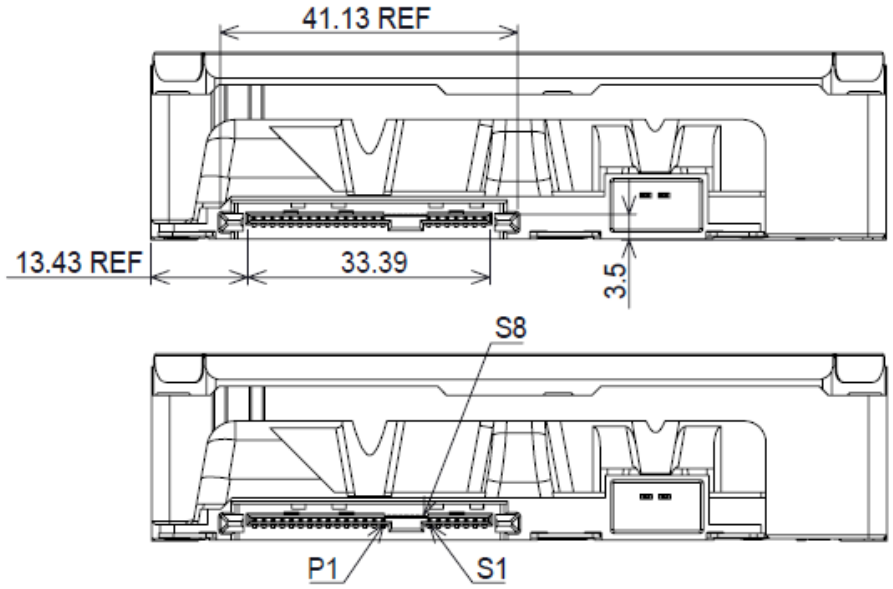

Figure 9 Connector locations

6.5.3 Drive mounting

The drive will operate in all axes (6 directions). Performance and error rate will stay within specification limits if the drive is operated in other orientations than that in which it was formatted.

For reliable operation, the drive must be mounted in the system securely enough to prevent excessive motion or vibration of the drive during seek operation or spindle rotation, using appropriate screws or equivalent mounting hardware.

The recommended mounting screw torque is 0.6 - 1.0 Nm (6-10 Kgf.cm).

The recommended mounting screw depth is 3.8 mm maximum for bottom and 3.56 mm maximum for horizontal mounting.

Drive level vibration test and shock test are to be conducted with the drive mounted to the table using the bottom four screws.

6.5.4 Heads unload and actuator lock

Heads are moved out from disks (unload) to protect the disk data during shipping, moving, or storage. Upon power down, the heads are automatically unloaded from disk area and the locking mechanism of the head actuator will secure the heads in unload position.

6.6 Vibration and shock

All vibration and shock measurements recorded in this section are made with a drive that has no mounting attachments for the systems. The input power for the measurements is applied to the normal drive mounting points.

6.6.1 Operating vibration

6.6.1.1 Random vibration (Linear)

The test is 30 minutes of random vibration using the power spectral density (PSD) levels shown below in each of three mutually perpendicular axes. The disk drive will operate without a hard error when subjected to the below random vibration levels.

Table 15 Random vibration PSD profile break points (operating)

Frequency	5 Hz	17 Hz	45 Hz	48 Hz	62 Hz	65 Hz	150 Hz	200 Hz	500 Hz	RMS (m/sec^2)
[$(m/sec^2)^2$/Hz]	1.9 x 10E–3	1.1 x 10E–1	1.1 x 10E–1	7.7 x 10E–1	7.7 x 10E–1	9.6 x 10E–2	9.6 x 10E–2	4.8 x 10E–2	4.8 x 10E-2	6.57

The overall RMS (root mean square) level is 6.57 m/sec^2 (0.67 G).

6.6.1.2 Swept sine vibration (Linear)

The drive will meet the criteria shown below while operating in the specified conditions:

- No hard error occur with 4.9 m/sec^2 (0.5 G) 0 to peak, 5 to 300 to 5 Hz sine wave, 0.5 oct/min sweep rate with 3-minute dwells at two major resonances
- No hard error occurs with 9.8 m/sec^2 (1 G) 0 to peak, 5 to 300 to 5 Hz sine wave, 0.5 oct/min sweep rate with 3-minute dwells at two major resonances

6.6.1.3 Random vibration (Rotational)

The drive will meet the criteria shown below while operating in the specified conditions:

- Less than 20% Performance degradation
- The overall RMS (Root Mean Square) level of vibration is 12.5Rad/sec^2. PSD profile is shown below.

Table 16 Random vibration (Rotational) PSD profile break points

Frequency	20 Hz	100 Hz	200 Hz	800 Hz	1000 Hz	1500 Hz	1700 Hz	2000 Hz	RMS (Rad/s^2)
[$(Rad/s^2)^2$/Hz]	1.90E-02	1.90E-02	1.87E-01	1.87E-01	5.33E-02	7.70E-03	4.00E-03	4.00E-03	12.5

6.6.2 Nonoperating vibration

The drive does not sustain permanent damage or loss of previously recorded data after being subjected to the environment described below

6.6.2.1 Random vibration

The test consists of a random vibration applied for each of three mutually perpendicular axes with the time duration of 10 minutes per axis. The PSD levels for the test simulate the shipping and relocation environment shown below. The overall RMS (Root Mean Square) level of vibration is 10.2 m/sec^2 (1.04 G).

Table 17 Random vibration PSD profile break points (nonoperating)

Frequency	2 Hz	4 Hz	8 Hz	40 Hz	55 Hz	70 Hz	200 Hz
[(m/sec^2)^2/Hz]	0.096	2.89	2.89	0.289	0.962	0.962	0.096

6.6.2.2 Swept sine vibration

- 19.6 m/sec^2 (2 G) (Zero to peak), 5 to 500 to 5 Hz sine wave
- 0.5 oct/min sweep rate
- 3 minutes dwell at two major resonances

6.6.3 Operating shock

The drive meets the following criteria while operating in the conditions described below. The shock test consists of 10 shock inputs in each axis and direction for total of 60. There must be a delay between shock pulses long enough to allow the drive to complete all necessary error recovery procedures.

- No hard error occurs with a 98.1 m/sec^2 (10 G) half-sine shock pulse of 11 ms duration
- No hard error occurs with a 294 m/sec^2 (30 G) half-sine shock pulse of 4 ms duration.
- No hard error occurs with a 490 m/sec^2 (50 G, write), 490 m/sec^2 (50 G, read) half-sine shock pulse of 2 ms duration

6.6.4 Nonoperating shock

The drive will operate without non-recoverable errors after being subjected to shock pulses with the following characteristics.

6.6.4.1 Trapezoidal shock wave

- Approximate square (trapezoidal) pulse shape
- Approximate rise and fall time of pulse is1 ms
- Average acceleration level is 490 m/sec^2 (50 G). (Average response curve value during the time following the 1 ms rise time and before the 1 ms fall with a time "duration of 11 ms")
- Minimum velocity change is 4.23 m/sec

6.6.4.2 Sinusoidal shock wave

The shape is approximately half-sine pulse. The figure below shows the maximum acceleration level and duration.

Table 18 Sinusoidal shock wave

Acceleration level (m/sec^2)	Duration (ms)
2450(250G)	2
1470(150G)	11

6.6.5 Nonoperating Rotational shock

All shock inputs shall be applied around the actuator pivot axis.

Table 19 Rotational Shock

Duration	Rad/sec^2
1 ms	30,000
2 ms	20,000

6.7 Acoustics

The upper limit criteria of the octave sound power levels are given in Bels relative to one picowatt and are shown in the following table. The sound power emission levels are measured in accordance with ISO 7779.

Table 20 Sound power levels

Mode	7200rpm (Typical / Max)
Idle	2.0 / 2.5
Operating	3.6 / 4.0

Mode definition:

Idle mode. The drive is powered on, disks spinning, track following, unit ready to receive and respond to interface commands.

Operating mode. Continuous random cylinder selection and seek operation of the actuator with a dwell time at each cylinder. The seek rate for the drive is to be calculated as shown below:

- Dwell time = 0.5 x 60/RPM
- Seek rate = 0.4 / (Average seek time + Dwell time)

6.8 Identification labels

The following labels are affixed to every drive shipped from the drive manufacturing location in accordance with the appropriate hard disk drive assembly drawing:

- A label containing the Western Digital logo and the part number
- A label containing the drive model number, the manufacturing date code, the formatted capacity, the place of manufacture, certification logos from various safety agencies (e.g. UL/CSA/CE/RCM, etc.)
- A bar code label containing the drive serial number
- A label containing the jumper pin description
- A user designed label per agreement

The above labels may be integrated with other labels.

6.9 Safety

6.9.1 UL and CSA standard conformity

The product is qualified per UL60950-1：Second Edition and CAN/CSA-C22.2 No.60950-1-07 Second Edition, for use in Information Technology Equipment including Electric Business Equipment.

The UL recognition or the CSA certification is maintained for the product life

The UL and C-UL certification mark is on the drive.

6.9.2 EU Safety standard conformity

The product is approved by TUV complying EN60950-1：2006+A11+A1+A12+A2 and EN 62368-1 : 2014 standards.

6.9.3 Flammability

The printed circuit boards used in this product are made of material with the UL recognized flammability rating of V-1 or better. The flammability rating is marked or etched on the board. All other parts not considered electrical components are made of material with the UL recognized flammability rating of V-2 minimum.

6.9.4 Safe handling

The product is conditioned for safe handling in regards to sharp edges and corners.

6.9.5 Substance restriction requirements

The product complies with the Directive 2011/65/EU and Directive (EU) 2015/863 on the restriction of the use of certain hazardous substances in electrical and electronic equipment (RoHS),

the Substances of Very High Concern (SVHC) updated candidates of European Union Regulation 1907/2006 on the Registration Evaluation Authorization and Restriction of Chemicals (REACH),

China RoHS Directive, Taiwan BSMI and with Halogen free requirements based on the electronics industry standard, IEC 61249-2-21 (http://www.iec.ch/).

6.9.6 Secondary circuit protection

The product contains both 5V and 12V over-current protection circuitry.

6.10 Electromagnetic compatibility

When installed in a suitable enclosure and exercised with a random accessing routine at maximum data rate, the drive meets the following worldwide EMC requirements:

- United States Federal Communications Commission (FCC) - Code of Federal Regulations, Part 15 (Class B)
- EN 55032: Electromagnetic compatibility of multimedia equipment - Emission Requirements
- EN 55035: Electromagnetic compatibility of multimedia equipment - Immunity requirements

6.10.1 CE Mark

The product is declared to be in conformity with requirements of the following EC directives.

EMC Directive 2014/30/EU on electromagnetic compatibility.

RoHS Directive 2011/65/EU and (EU) 2015/863 on the restriction of the use of certain hazardous substances in electrical and electronic equipment

6.10.2 RCM Mark

The product complies with the standard of Electromagnetic compatibility of multimedia equipment – Emission requirements, EN 55032, which is required by Australian Communications and Media Authority.

6.10.3 BSMI Mark

The product complies with the Taiwan's EMC standard of information technology equipment – Radio disturbance characteristics – Limits and methodsof measurement, CNS 13438 Class B.

6.10.4 KC Mark

The product complies with the Korean EMC standards of KN32 for Emission and KN35 for Immunity. The product is registered under Broadcasting and Communication Equipments.

6.11 Third Party Open Source Licenses

This product may include or use the following open source software subject to the following open source licenses. If required by the applicable open source license, Western Digital may provide the open source code to you on request either electronically or on a physical storage medium for a charge covering the cost of performing such distribution, which may include the cost of media, shipping, and handling.

Each third-party component that may be included is listed below, followed by its associated license text.

6.11.1 bzip2

https://sourceware.org/bzip2/

This program, "bzip2", the associated library "libbzip2", and all documentation, are copyright (C) 1996-2010 Julian R Seward. All rights reserved.

Redistribution and use in source and binary forms, with or without modification, are permitted provided that the following conditions are met:

1. Redistributions of source code must retain the above copyright notice, this list of conditions and the following disclaimer.
2. The origin of this software must not be misrepresented; you must not claim that you wrote the original software. If you use this software in a product, an acknowledgment in the product documentation would be appreciated but is not required.
3. Altered source versions must be plainly marked as such, and must not be misrepresented as being the original software.
4. The name of the author may not be used to endorse or promote products derived from this software without specific prior written permission.

THIS SOFTWARE IS PROVIDED BY THE AUTHOR ``AS IS'' AND ANY EXPRESS OR IMPLIED WARRANTIES, INCLUDING, BUT NOT LIMITED TO, THE IMPLIED WARRANTIES OF MERCHANTABILITY AND FITNESS FOR A PARTICULAR PURPOSE ARE DISCLAIMED. IN NO EVENT SHALL THE AUTHOR BE LIABLE FOR ANY DIRECT, INDIRECT, INCIDENTAL, SPECIAL, EXEMPLARY, OR CONSEQUENTIAL DAMAGES (INCLUDING, BUT NOT LIMITED TO, PROCUREMENT OF SUBSTITUTE GOODS OR SERVICES; LOSS OF USE, DATA, OR PROFITS; OR BUSINESS INTERRUPTION) HOWEVER CAUSED AND ON ANY THEORY OF LIABILITY, WHETHER IN CONTRACT, STRICT LIABILITY, OR TORT (INCLUDING NEGLIGENCE OR OTHERWISE) ARISING IN ANY WAY OUT OF THE USE OF THIS SOFTWARE, EVEN IF ADVISED OF THE POSSIBILITY OF SUCH DAMAGE.

Julian Seward, jseward@bzip.org
bzip2/libbzip2 version 1.0.6 of 6 September 2010

6.11.2 PCRE

https://www.pcre.org/

PCRE LICENCE

PCRE is a library of functions to support regular expressions whose syntax and semantics are as close as possible to those of the Perl 5 language.

Release 5 of PCRE is distributed under the terms of the "BSD" licence, as specified below. The documentation for PCRE, supplied in the "doc" directory, is distributed under the same terms as the software itself.

Written by: Philip Hazel <ph10@cam.ac.uk>

University of Cambridge Computing Service,
Cambridge, England. Phone: +44 1223 334714.

Copyright (c) 1997-2004 University of Cambridge
All rights reserved.

Redistribution and use in source and binary forms, with or without modification, are permitted provided that the following conditions are met:

* Redistributions of source code must retain the above copyright notice, this list of conditions and the following disclaimer.
* Redistributions in binary form must reproduce the above copyright notice, this list of conditions and the following disclaimer in the documentation and/or other materials provided with the distribution.
* Neither the name of the University of Cambridge nor the names of its contributors may be used to endorse or promote products derived from this software without specific prior written permission.

THIS SOFTWARE IS PROVIDED BY THE COPYRIGHT HOLDERS AND CONTRIBUTORS "AS IS" AND ANY EXPRESS OR IMPLIED WARRANTIES, INCLUDING, BUT NOT LIMITED TO, THE IMPLIED WARRANTIES OF MERCHANTABILITY AND FITNESS FOR A PARTICULAR PURPOSE ARE DISCLAIMED. IN NO EVENT SHALL THE COPYRIGHT OWNER OR CONTRIBUTORS BE LIABLE FOR ANY DIRECT, INDIRECT, INCIDENTAL, SPECIAL, EXEMPLARY, OR CONSEQUENTIAL DAMAGES (INCLUDING, BUT NOT LIMITED TO, PROCUREMENT OF SUBSTITUTE GOODS OR SERVICES; LOSS OF USE, DATA, OR PROFITS; OR BUSINESS INTERRUPTION) HOWEVER CAUSED AND ON ANY THEORY OF LIABILITY, WHETHER IN CONTRACT, STRICT LIABILITY, OR TORT (INCLUDING NEGLIGENCE OR OTHERWISE) ARISING IN ANY WAY OUT OF THE USE OF THIS SOFTWARE, EVEN IF ADVISED OF THE POSSIBILITY OF SUCH DAMAGE.

Part 2. Interface specification

7 SAS Attachment

This section defines some basic terminology and describes the behavior of the drive when attached to a ***S***erial ***A***ttached ***SCSI*** (i.e. SAS) domain

7.1 General

This section introduces some of the terminology that is used in describing ***S***erial ***A***ttached ***S***CSI (i.e. SAS).

SAS is logically a bi-directional, point to point serial data channel that leverages the SCSI protocol set. Nodes are physically connected via a Port.

Ports may be connected point-to-point via SAS expanders, to form a complex switching network, referred to as a SAS domain.

SAS is defined in terms of a hierarchy of functions or 'protocol layers'. This discussion will focus in on the aspects of SAS that are relevant to this product.

- SCSI Application Layer - Clause 10
- SSP Transport Layer (Serial SCSI Protocol) - Clause 9
- SAS Port Layer - Clause 8
- SSP Link Layer - Clause 7
- SAS PHY Layer - Clause 6
- SAS Physical Layer - Clause 5

All layers are defined in the following ANSI standard.

- "SAS Protocol Layer (SPL-3)"

In addition, this drive claims compliance with the following ANSI standards.

- T10/BSR INCITS 515, SCSI Architecture Model - 5 (SAM-5) (under development, ISO/IEC 14776-415)
- T10/BSR INCITS 502, SCSI Primary Commands - 5 (SPC-5) (planned as ISO/IEC 14776-455)
- T10/BSR INCITS 506, SCSI Block Commands - 4 (SBC-4) (under development, ISO/IEC 14776-323)
- T10/BSR INCITS 491, SCSI / ATA Translation - 4 (SAT-4) (at Public Review).

7.2 SAS Features

The following SAS features are supported by the Drive.

- SAS Compliance
  - "Serial Attached SCSI -3 (SAS-3)"

- SAS Protocol
  - This drive supports ***S***erial ***SCSI P***rotocol (SSP).
  - STP (Tunneled SATA) and SMP (Management protocol) protocols are NOT supported.
- SAS Dual Ported Operation
  - Single PHY ports (i.e. Narrow port. Wide Port NOT supported)
  - Ports function independently with separate firmware controls
  - Multiple DMA engines capable of accessing either port
  - Maximum outstanding credit of *four* per port
- Physical Link Rates
  - G1 (1.5 Gbps), G2 (3.0 Gbps) , G3 (6.0 Gbps), and G4(12 Gbps) supported
  - Largely Automated OOB and speed negotiation sequences
  - Optional Support for the hot-plug timeout in hardware
- Partial support for Disconnect/Reconnect Mode Page (0x02)
  - Maximum Connect Time Limit - SUPPORTED
  - Bus Inactivity Time Limit - *NOT SUPPORTED*
  - Maximum Burst Size - SUPPORTED
  - First Burst Size - *NOT SUPPORTED*
- Power Consumer Device Support
  - Supports POWER_CAPABLE = 01b (Drive is a power consumer device)
- Interface Power Management Support
  - Supports partial/slumber low phy power condition
- Others...
  - Connection Rate Matching
  - Hard Reset primitive sequence detection and validation in hardware
  - Support for NOTIFY (Enable Spin-up) and NOTIFY (Power Loss Expected)
  - Hashed WWN validation in hardware
  - extended CDB support

7.3 SAS Names and Identifiers

In SAS, device and port names are worldwide unique names within a transport protocol. Port identifiers are the values by which ports are identified within a domain, and are used as SAS addresses. Phy identifiers are unique within a device.

Table 21 Names and identifiers

Object	SAS Implementation
Port Identifier	SAS address
Port Name	Not defined
Device Name	SAS address
Phy Identifier	Phy identifier

Where the SAS Address format is defined by ANSI as follows:

Table 22 IEEE Registered Name format

Byte	Bit							
	7	6	5	4	3	2	1	0
0	NAA (5h)				(MSB)			
1	IEEE Company ID							
2								
3	(LSB)				(MSB)			
4	Vendor Specific Identifier (LSB)							
5								
6								
7								

The SAS Device Name is a unique SAS address worldwide name. This device name is reported through the SCSI Vital Products Data.
Each of the two SAS ports also has a unique SAS address worldwide name. These port identifiers are reported in the IDENTIFY Address frame and are used as source and destination addresses in the OPEN address frame. They are also reported through the SCSI Vital Products Data.
Since this drive is one device with two ports it has three SAS addresses. All SAS Addresses are in 64-bit IEEE Registered Name format, as illustrated in Table 23 Name Address Authority field.

Table 23 Name Address Authority field

Field	Description
OUI	Organizationally Unique Identifier (24 bits). Canonical form means that each byte is stored in “bit reversed” order.
Block Assignment	Block assignment within WDC, a Western Digital Company
Object	Device Name/Port Identifier 00b Logical Unit Name 01b Port 1 10b Port 2 11b Target Device Name
S/N	Sequentially increasing drive serial number assigned at manufacturing.

7.4 Spin up

The drive supports the Active Wait, Active, and Stopped states specified by the SAS standard. After power on, the drive enters the Active Wait state. The Drive will not spin up its spindle motor after power on until it receives a NOTIFY (Enable Spinup) primitive on either port to enter the Active state. If a NOTIFY (Enable Spinup) primitive is received prior to receiving a StartStop Unit command with the Start bit set to one, spin up will begin immediately. For SAS, this is analogous to auto-spinup function in legacy SCSI. This provision allows the system to control the power spikes typically incurred with multiple drives powering on (and spinning up) simultaneously.

If a StartStop command with the Start bit set to one is received prior to receiving a NOTIFY (Enable Spinup), the drive will not start its spindle motor until Notify (Enable Spinup) is received on either port. Successful receipt of a NOTIFY (Enable Spinup) is a prerequisite to spin up.

If the StartStop Unit command with the Start bit set, also has the immediate bit set, status will be returned prior to actually spinning up the motor, but the actual act of spinning up the motor is deferred until receipt of the NOTIFY (Enable Spinup) primitive. If a media access command is received after sending immediate Status and prior to receiving a NOTIFY (Enable Spinup), the Drive will terminate the command with CHECK CONDITION status with a sense key of NOT READY and an additional sense code of LUN NOT READY, NOTIFY (ENABLE SPINUP) REQUIRED. If a media access command is received after receiving the NOTIFY (Enable Spinup) primitive and before the drive is finished spinning up, the Drive will terminate the command with CHECK CONDITION status with a sense key of LUN NOT READY and an addition sense code of LUN IS IN THE PROCESS of BECOMING READY.

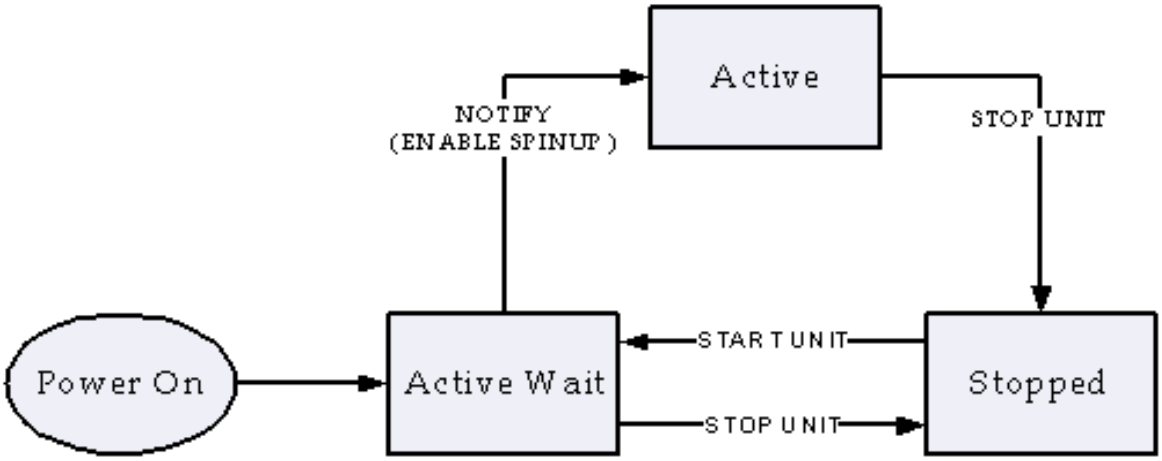

Figure 10 Spin up

7.5 PHY Layer

The Phy layer defines 8b10b coding and OOB signals. The Phy layer is the interface between the link layer and the physical layer. This section describes Phy Layer behaviors of the Drive. For a complete description of SAS Phy Layer, please see the ANSI specification, SPL-3.

7.5.1 Link Reset Sequence

The Link Reset Sequences for SAS are defined in the SPL-3 ANSI specification and shown below. As show in the diagram, a Phy Reset sequence, consists of an OOB sequence, followed by speed negotiations. Link Reset Sequences will always include a PHY Reset Sequence, followed by an Identification Sequence. Inclusion of a Hard reset sequence is optional. If Hard Reset is performed, it will be preceded by a Phy Reset sequence, and will be followed by Phy Reset/Identification sequences.

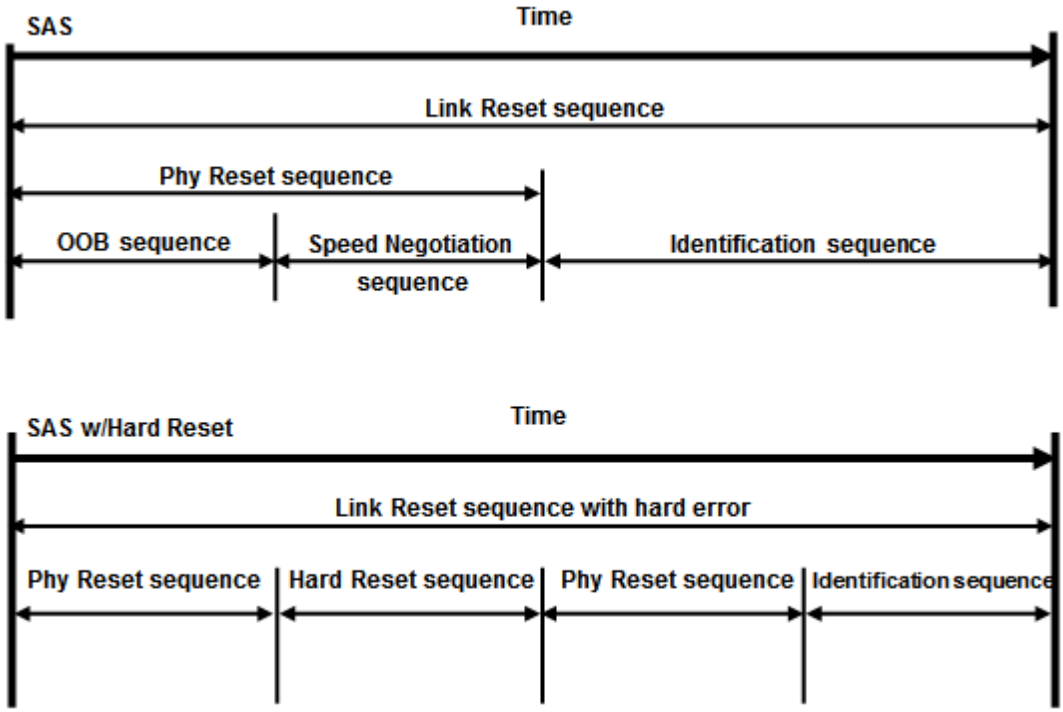

Figure 11 Link Reset Sequence

7.5.2 Hard Reset

A Hard Reset sequence on a port will not affect the other port, but the outstanding commands on the other port will be aborted due to the LUN reset associated with the Hard Reset. The effect of a Hard Reset will be similar to a Power on Reset, and will result in the re-initialization of all Drive resources. The first command issued from every initiator on the port that received the Hard Reset will result in a CHECK CONDITION with a sense key of UNIT ATTENTION and an additional sense code of SCSI BUS RESET OCCURRED. The first command issued from every initiator on the other port will result in a CHECK CONDITION and an additional sense code of BUS DEVICE RESET OCCURRED.

A Hard Reset Sequence will never be issued by the Drive. A link reset will be initiated by the drive on the affected port upon completion of Hard Reset processing.

7.5.3 SAS OOB (Out of Band)

Out of band (OOB) signals are low-speed signal patterns detected by the Phy that do not appear in normal data streams. They consist of defined amounts of idle time followed by defined amounts of burst time. During the idle time, D.C. idle is transmitted. During the burst time, ALIGN (0) primitives are transmitted repeatedly. The signals are differentiated by the length of idle time between the burst times.

As a SAS compliant device, the Drive uses three OOB signals: COMINIT/COMRESET and COMWAKE and COMSAS.OOB operations are beyond the scope of this specification. Please refer to the ANSI SPL-3 specification for more details.

The drive will initiate OOB by sending COMINITs, under the following conditions:

- POR
- loss of sync
- Identify timeout

7.5.4 SAS Speed Negotiation

The Drive supports G1 (1.5 Gbps), G2 (3.0 Gbps), G3 (6.0 Gbps), and G4 (12 Gbps) negotiation speeds. The default maximum negotiation rate is G3 speed (per byte 32 in the Phy Control and Discover Mode Page 19 subpage 1). Drive is SAS3 device and supports SNW-1, SNW-2, and SNW-3 speed negotiation with Phy capabilities exchange, and training (Train-SNW). Phy capabilities is defined in table below:

Phy Capabilities:

Table 24 SAS Speed Negotiation

Byte /Bit	7	6	5	4	3	2	1	0
0	Start =1b	TX SSC Type = 0b	Reserved		Requested Logical Link Rate = 0h			
1	G1 Without SSC=1b	G1 With SSC=1b	G2 Without SSC=1b	G2 With SSC=1b	G3 Without SSC=1b	G3 With SSC=1b	G4 Without SSC=1b	G4 With SSC=1b
2	Reserved							
3	Reserved							Parity

- **Start** is set to 1 to indicate the beginning of the PHY capabilities
- **TX SSC Type** is set to 1 to indicate that PHY's transmitter uses center-spreading-SSC when SSC is enabled
- **TX SSC Type** is set to 0 to indicate that PHY's transmitter uses down-spreading-SSC when SSC is enabled
- **Requested Logical Link Rate** field is set to 0 to indicate that drive does not support multiplexing
- **G1 Without SSC** is set to 1 to indicate that drive supports G1 (1.5 Gbps) without SSC
- **G2 Without SSC** is set to 1 to indicate that drive supports G2 (3.0 Gbps) without SSC
- **G3 Without SSC** is set to 1 to indicate that drive supports G3 (6.0 Gbps) without SSC
- **G4 Without SSC** is set to 1 to indicate that drive supports G4 (12.0 Gbps) without SSC
- **G1 With SSC** set to 1 to indicate that drive supports G1 (1.5 Gbps) with SSC
- **G2 With SSC** set to 1 to indicate that drive supports G2 (3.0 Gbps) with SSC
- **G3 With SSC** set to 1 to indicate that drive supports G3 (6.0 Gbps) with SSC
- **G4 With SSC** is set to 1 to indicate that drive supports G4 (12.0 Gbps) with SSC
- **Parity** is set to 1 for even parity of the total number of SNW-3 PHY capabilities, including Start bit.

Training is based on the highest untried commonly supported settings on the exchanged SNW-3 supported settings bits. If a Train-SNW is invalid and there are additional, untried, commonly supported settings exchanged during SNW-3, then a new Train-SNW will be performed based on the next highest untried, commonly supported settings. Table 25 defines the priority of the supported settings bits.

Table 25 Supported Settings Bit Priorities

Priority	Bit
Highest	G4 With SSC bit
...	G4 Without SSC bit
...	G3 With SSC bit
...	G3 Without SSC bit
...	G2 With SSC bit
…	G2 Without SSC bit
…	G1 With SSC bit
Lowest	G1 Without SSC bit

7.5.5 PHY Error Handling

This section defines the PHY layer error handling of the drive.

Table 26 PHY Layer Error Handling

Error	Error Handling Procedure
Link Reset	After POR or Hard Reset, the drive initiates link reset by transmitting exactly 1 COMINIT. For other resets, the drive does not initiate Link Reset.
COMINIT Timeout	If COMINIT or COMSAS is not received before the ”Hot Plug Timeout" period expires, the drive continues to transmit DC zero and wait for COMINIT/COMSAS. Firmware is notified. This is not considered an error.
COMSAS Timeout	If COMINIT is detected, COMSAS is transmitted, and COMSAS is not received before the COMSAS Detect Timeout timer expires, firmware is notified and the drive continues to transmit DC zero and wait for COMINIT.
Speed Negotiation Errors	If speed negotiation fails with no match, or if the drive fails retrying the matched link rate, firmware is notified and the drive continues to transmit DC zero and wait for COMINIT. If the match link rate retry fails, the Phy Reset Problem counter is incremented (Log Page 0x18).
Loss of Sync	If the drive loses DWORD sync long enough for the loss of sync timer to expire, firmware is notified and the drive transmits a COMINIT to initiate a new link reset. The Loss of DWORD sync counter is incremented (Log Page 0x18).
Disparity/Invalid DWORD Error	If a disparity error or an invalid DWORD is detected by the drive, the Invalid DWORD Count is incremented (Log Page 0x18). The Running Disparity Error Count in Log Page 0x18 is not used

7.6 Link Layer

The SAS link layer defines primitives, address frames, and connections. The Link layer is the interface between the Port layer and the Phy layer. This section describes Link Layer behaviors of the Drive. For a complete description of SAS Link Layer, please see the ANSI specification, SPL-3.

7.6.1 Address Frames

Address frames are used for the identification sequence and for connection requests and are only sent outside connections. The Address Frame format is defined below:

Table 27 Address Frame Format

Byte	Bit							
	7	6	5	4	3	2	1	0
0	Rsvd	Device Type			Address Frame Type			
1-27	Frame Type Dependent bytes							
28-31	CRC							

- The ADDRESS FRAME TYPE field indicates the type of address frame and is defined in Table 28. This field determines the definition of the frame type dependent bytes.

Table 28 Frame type:

Value	Address Frame Type Description
0000b	IDENTIFY: Identification Sequence
0001b	OPEN: Connection Request
Others	RESERVED

7.6.1.1 Identify Address Frame

The IDENTIFY address frame format is used for the identification sequence. The IDENTIFY address frame is sent after the phy reset sequence completes. The Identify Address Frame format is defined as follows:

Table 29 Identify Address Frame

Byte	Bit							
	7	6	5	4	3	2	1	0
0	Rsvd	Device Type = 1			Address Frame Type = 0			
1	Reserved				Reason			
2	Reserved				SSP Initiator Port=0b	STP Initiator Port=0b	SMP Initiator Port=0b	Rsvd
3	Reserved				SSP Target Port=1b	STP Target Port=0b	SMP Target Port=0b	Rsvd
4-11	Device Name							
12-19	SAS Address							
20	PHY Identifier							
21	Persistent Capable	Power Capable		Slumber Capable	Partial Capable	Inside ZPSDS Persistent=0b	Requested Inside ZPSDS=0b	Break_Reply Capable=1b
22	Reserved							Pwr_DIS Capable
23-27	Reserved							
28-31	CRC							

- **Device Type**: set to 001b to indicate that this drive is an "End Device".
- **Address Frame Type**: set to 00b to indicate that this is an IDENTIFY.
- **Reason:** field indicates the reason for link reset sequence as defined in Table 31.
- **Initiator Port bits**: set to 000b since this device is a target device only
- **Target Port bits**: set to 100b since this device is a SSP target device only
- **Device Name**: field contains Target Device Identifier
- **SAS ADDRESS**: field contains the port identifier of the SAS port transmitting this frame.
- **PHY Identifier**: field contains the PHY identifier of the PHY transmitting this frame.
- **Persistent Capable** is set to 0b to indicate the drive does not support persistent connections
- **Inside ZPSDS Persistent**: set to 0b since this is an "End Device"
- **Requested Inside ZPSDS**: set to 0b since this is an "End Device"
- **Power Capable** is set to 00b to indicate drive does not issue PWR_REQ or PWR_DONE, and does not respond to PWR_GRANT. Setting this field to 01b indicates that the drive is capable of requesting additional consumption of power (i.e. the drive is a power consumer device). A Power Consumer device manages the requests received from management application layer and the requests that are sent to power source device. It also processes power consumption grants received from a power source device. A power consumer device only requests additional power consumption on one phy at a time and:
  a) exit any low power condition before requesting consumption of power beyond the typical peak power, and
  b) disable any enabled low power phy power conditions until consumption of power beyond the typical peak power is complete and then re-enable any low phy power condition that was disabled.

  The Power Capable field is defined as in Table 30.

Table 30 Power Capable field

Code	Description
00b	**The device containing the phy:** • does not respond to PWR_GRANT with PWR_ACK, PWR_REQ with PWR_ACK, or PWR_DONE with PWR_ACK; and • does not issue PWR_REQ or PWR_DONE.
01b	**The device containing the phy is capable of allowing the management of additional consumption of power by:** a) Issuing PWR_REQ and PWR_DONE; and b) Responding to PWR_GRANT with PWR_ACK.
10b	**The device containing the phy is capable of managing the additional consumption of power by responding to:** a) PWR_REQ with PWR_ACK: b) PWR_REQ with PWR_GRANT; and c) PWR_DONE with PWR_ACK
11b	**Reserved**

- **Slumber Capable** is set to 0b to indicate that the slumber power PHY mode is disabled. Setting it to 1b indicates that the drive is capable of supporting the slumber PHY power condition. While the drive is in slumber PHY power condition:
  a) The phy is only capable of processing a COMINIT or COMWAKE
  b) The phy may take more time to return to the active phy power condition than while in the partial phy power condition; and
  c) The power consumed by the phy should be less than the power consumed while the phy is in the active phy power condition and while the phy is in the partial phy power condition.
- **Partial Capable** is set to 0b to indicate that the partial power PHY mode is disabled. Setting it to 1b indicates that the drive is capable of supporting partial PHY power condition. While the drive is in Partial power PHY condition:
  a) The phy is only capable of processing COMINIT or COMWAKE;
  b) The phy may take less time to return to the active phy power condition than while in the slumber phy power condition; and
  c) The power consumed by the phy should be less than the power consumed while the phy is in the active phy power condition and may be greater than the power consumed while the phy is in slumber phy power condition.
- **Break_Reply Capable**: set to 1b to indicate that this port is capable of sending BREAK_REPLY primitive sequence in responding of receiving BREAK primitive sequences
- **Pwr_DIS Capable** is set to 1b to indicate the drive does support the PWR_DIS signal as defined in SAS-3

Table 31 Reason field

Value	Address Frame Type Description
00b	Power on
01b	OPEN: Connection Request
02b	Hard Reset (received a Hard Reset during hard reset sequence)
04b	Loss of dword synchronization
07b	Break timeout timer expired
08b	Phy test function stopped
Others	RESERVED

7.6.1.2 OPEN Address Frame

The OPEN address frame format is used for the identification sequence. The OPEN address frame is sent after the phy reset sequence completes. The OPEN Address Frame format is defined as follows:

Table 32 OPEN Address Frame format

Byte	Bit							
	7	6	5	4	3	2	1	0
0	Initiator Port=0	Protocol = 1			Address Frame Type = 1			
1	Features = 0				Connection Rate = 8h, 9h, Ah or Bh			
2-3	Initiator Connection Tag							
4-11	Destination SAS Address							
12-19	Source SAS Address							
20	Source Zone Group							
21	Pathway Blocked Count							
22-23	Arbitration Wait Time							
24-27	More Compatible Features							
28-31	CRC							

- Initiator Port: This bit is set to zero when the Drive is the source port acting as a SAS target.
- Protocol: this field is set to 001b to indicate SSP Protocol.
- Features: this field is set to zero and ignored by the Drive per SPL-3.
- Connection Rate: field should be set to 8h (1.5Gbps), 9h (3Gbps), Ah (6Gbs), or Bh (12Gbs), depending on requested link rate. Rate matching is supported by the Drive, therefore if the Link to the drive is 3.0Gbps, and the Connection Rate is 1.5Gbps, the Drive will insert ALIGNs between DWords, to match the Connection Rate.
- Initiator Connection Tag: The Drive will set this value to the last value received from this Initiator.
- Destination SAS Address: field contains the port identifier of the SAS port to which a connection is being requested.
- Source SAS Address: field contains the port identifier on the port that originated this frame (i.e. the drive's port address).
- Source Zone Group: This field is set to zero and ignored by the Drive per SPL-3.
- Pathway Blocked Count: this field indicates the number of times the port has retried this connection request due to receiving OPEN_REJECT (PATHWAY BLOCKED). The Drive will not increment the PATHWAY BLOCKED COUNT value past FFh.
- Arbitration Wait Time: this field indicates how long the port transmitting the OPEN address frame has been waiting for a connection request to be accepted. For values from 0000h to 7FFFh, the Arbitration Wait Time timer increments in one microsecond steps. For values from 8000h to FFFFh, the Arbitration Wait Time timer increments in one millisecond step.
- More Compatible Features: this field is set to zero and ignored by the Drive per SPL-3.

7.6.2 Link Layer Error Handling

This section defines the Link layer error handling of the drive.

Table 33 Link Layer Error Handling (part 1 of 2)

Error	Error Handling Procedure
IDENTIFY Timeout	If IDENTIFY is not received before the IDENTIFY timer expires (1ms), firmware is notified and the drive transmits a COMINIT to initiate a new link reset.
BREAK Received	If BREAK is received while the drive has ACK/NAK balance, BREAK or BREAK_REPLY is transmitted and a new connection may be opened if the drive still has frames to transmit. Firmware is not notified. If BREAK is received while the drive does NOT have ACK/NAK balance, BREAK or BREAK_REPLY is transmitted and the current command is aborted and will return Check Condition status with sense data indicating an ACK/NAK timeout.
NAK and ACK/NAK Timeout	If a NAK is received on a RESPONSE frame, the RESPONSE frame is retransmitted with the RETRANSMIT bit set to zero. If an ACK or NAK is not received for a RESPONSE frame within 1ms, the RESPONSE frame will be retransmitted with the RETRANSMIT bit set to one. The drive will retry sending a RESPONSE frame once.
Bad Frame CRC	If a frame fails the CRC check, the frame is NAKed by the drive and discarded. This is a link layer function. The command associated with a NAKed DATA or XFER_RDY frame is aborted with check condition status and sense data corresponding to DATA_PHASE_ERROR is returned. COMMAND frames that fail the CRC check are NAKed and discarded.
OPEN_REJECT	OPEN_REJECT – Retry able Variations OPEN_REJECT(RETRY) - Will be retried indefinitely by the drive. This case is considered to be occur when the initiator is temporarily not available to accept connections (for example when it is not able to extend R-Rdy credit at this time due to lack of buffers...), so the initiator will ask us to keep "RETRY"-ing, until it becomes available at a later time. Thus, we don't consider this an error condition, but part of normal behavior for the initiator. OPEN_REJECT(RATE_NOT_SUPPORTED) – If this occurs, it must mean that a link between the drive and initiator renegotiated to a lower link rate after the command was received. In this case, we retry in a new connection at 1.5Gbps. If this error is received for a 1.5Gbps connection, the command is internally aborted. OPEN_REJECT – (PATHWAY_BLOCKED) OPEN_REJECT (BAD_DESTINATION), OPEN_REJECT (WRONG_DESTINATION), OPEN_REJECT (PROTOCOL_NOT_SUPPORTED) – If these OPEN_REJECTs are received, we internally abort the command.
Credit Timeout	If credit is not received before the credit timer expires, DONE(CREDIT_TIMEOUT) is sent to the Initiator.
DONE Timeout	If credit is extended and the DONE timer expires, BREAK is sent by hardware to tear down the connection.
CREDIT_BLOCKED	If CREDIT BLOCKED is received and the drive has frames to send in the current connection, DONE(CREDIT_TIMEOUT) is returned. Otherwise, DONE(NORMAL) is returned.

Table 34 Link Layer Error Handling (part 2 of 2)

Error	Error Handling Procedure
OPEN Frame Checking	Reserved fields in the OPEN frame are not checked. The Dest Address field is checked, and if it doesn't match OPEN_REJECT (WRONG_DESTINATION) is returned. The Protocol field is checked and if it isn't set to SSP OPEN_REJECT (PROTOCOL_NOT_SUPPORTED) is returned. If the Link Rate exceeds the physical link rate on that port, OPEN_REJECT (LINK_RATE_NOT_SUPPORTED) is returned. The Initiator bit is not checked.
OPEN Response Timeout	If AIP or OPEN_ACCEPT is not received before the OPEN Response timer expires, the hardware transmits BREAK.
CLOSE Timeout	If CLOSE is not received before the CLOSE timer expires, the hardware transmits BREAK.
Phy Not Ready	If Link Reset occurs outside of a connection, commands can execute normally across the link reset. If a link reset occurs inside of a connection, the behavior is similar to BREAK in that it is treated as an abruptly closed connection. In cases where the command cannot be continued normally (e.g. a frame is corrupted by OOB signals, or we do not have ACK/NAK balance), the command is terminated with CHECK CONDITION status with sense data corresponding to ACK/NAK TIMEOUT.

7.7 Transport Layer

The Transport layer defines frame formats. The Transport layer is the interface between the application layer and port layer. It is responsible for constructing and parsing frame contents. For SSP, the transport layer only receives frames from the port layer that are going to be ACKed by the link layer. This section describes Transport Layer behaviors of the Drive. For a complete description of SAS Transport Layer, please see the ANSI specification, SPL-3.

The transport layer defines the frame format as follows.

Table 35 SAS Frame Format

Byte	Bit							
	7	6	5	4	3	2	1	0
0	Frame Type							
1-3	Hashed Destination Address							
4	Reserved							
5-7	Hashed Source Address							
8-9	Reserved							
10	Reserved			TLR Control = 00b		Retry Data Frames =0b	Retransmit	Rsvd
11	Reserved						# of fill bytes	
12-15	Reserved							
16-17	Tag							
18-19	Target Port Transfer Tag							
20-23	Data Offset							
24-m	Information Unit							
	Fill Bytes (if Needed)							
(n-3)-n	CRC							

- FRAME TYPE field, which defines the format of the INFORMATION UNIT field as follows:

Table 36 FRAME TYPE field

Code	Name of Frame	Information Unit	Originator	IU Size (bytes)
01h	DATA	Data	Initiator or Target	1-1024
05h	XFER_RDY	Data Transfer Ready	Target	12
06h	COMMAND	Command	Initiator	28-284
07h	RESPONSE	Response	Target	24-1024
16h	TASK	Task Management Function	Initiator	28
f0-ffh	vendor specific			
all others	reserved			

- The HASHED DESTINATION SAS ADDRESS field contains the hashed value of the destination SAS address.
- The HASHED SOURCE SAS ADDRESS field contains the hashed value of the source SAS address.
- The TLR CONTROL field is not supported.
- The RETRY DATA FRAMES is not supported.
- The CHANGING DATA POINTER is not supported.

- The NUMBER OF FILL BYTES field indicates the number of fill bytes between the INFORMATION UNIT field and the CRC field. The RETRANSMIT bit is set to one for RESPONSE frames when attempting to retransmit this frame due to receiving an error during the initial transmission. It shall be set to zero for all other frame types. The NUMBER OF FILL BYTES field shall be set to zero for all frame types except DATA frames.
- The TAG field contains a value that allows the SSP port to establish a context for commands and task management functions.
- The TARGET PORT TRANSFER TAG field is set and used by the drive. The initiator should echo this field in outbound data IU.
- The INFORMATION UNIT field contains the information unit, the format of which is defined by the FRAME TYPE field.
- Fill bytes shall be included after the INFORMATION UNIT field so the CRC field is aligned on a four byte boundary.

7.7.1 Command Information Unit

The COMMAND frame is sent by an SSP initiator port to request that a command be processed by the drive.

Table 37 COMMAND Information Unit

Byte	Bit							
	7	6	5	4	3	2	1	0
0-7	Logical Unit Number							
8	Reserved							
9	Disable first burst=0	Reserved				Task Attribute		
10	Reserved							
11	Additional CDB Length (in Dwords)							Rsvd
12-27	CDB							
28-n	Additional CDB Bytes							

- The LOGICAL UNIT NUMBER field contains the address of the logical unit. The drive only supports a LUN of 0's.
- A DISABLE FIRST BURST bit is not supported by the drive
- The TASK ATTRIBUTE field is defined as follows:

Table 38 TASK ATTRIBUTE field

Value	Attribute
000b	Simple_Q
001b	Head_of_Q
010b	Ordered_Q
100b	ACA_Q (not supported)
101b	Reserved

- The ADDITIONAL CDB LENGTH field contains the length in dwords (four bytes) of the ADDITIONAL CDB field.
- The CDB and ADDITIONAL CDB BYTES fields together contain the CDB.

7.7.2 TASK Information Units

Table 39 TASK Information Unit

Byte	Bit							
	7	6	5	4	3	2	1	0
0-7	Logical Unit Number							
8-9	Reserved							
10	Task Management Function							
11	Reserved							
12-13	Tag of Task to be Managed							
14-27	Reserved							

- The LOGICAL UNIT NUMBER field contains the address of the logical unit. The drive only supports a LUN of 0's.
- The TASK MANAGEMENT FUNCTION field is defined as follows:

Table 40 TASK MANAGEMENT FUNCTION field

Value	Function
01h	ABORT TASK: The Drive shall perform the ABORT TASK associated with the value of the TAG OF TASK TO BE MANAGED field
02h	ABORT TASK SET: The Drive shall perform the ABORT TASK SET by aborting all outstanding tasks for the Initiator that sent the TMF.
04h	CLEAR TASK SET: This TMF causes the Drive to abort all tasks in the task set. The action is equivalent to receiving a series of Abort Task requests from all Initiators. A unit attention condition shall be generated for all other Initiators with tasks in the task set. The Additional Sense Code shall be Commands cleared by another Initiator.
08h	LUN RESET: The LUN RESET causes the Target to execute a hard reset. This means: 1. Abort all tasks for all Initiators on either both ports. 2. Release any device reservation on either port. Set a Unit Attention condition for all Initiators.
10h	I_T NEXUS RESET: The I_T NEXUS RESET causes the drive to abort all outstanding tasks for the Initiator that sent the TMF. In addition, a Unit Attention is set for the initiator that sent the TMF, indicating I_T NEXUS LOSS. This TMF does not affect task sets for other initiators.
40h	CLEAR ACA (not supported)
80h	QUERY TASK: The drive shall return a response of FUNCTION SUCCEEDED if the specified task exists, or FUNCTION COMPLETE if the specified task does not exist.
81h	QUERY TASK SET: The drive shall return a response of FUNCTION SUCCEEDED if there is any task exist, or FUNCTION COMPLETE if there is no task exist.
82h	QUERY ASYNCHRONOUS EVENT (formerly QUERY UNIT ATTENTION): The drive shall return a response of FUNCTION SUCCEEDED if there is a unit attention or a deferred error pending, or FUNCTION COMPLETE if there is no unit attention or no deferred error pending.
others	RESERVED: The Drive will return a RESPONSE frame with the DATAPRES field set to RESPONSE_DATA and its RESPONSE CODE field set to TASK MANAGEMENT FUNCTION NOT SUPPORTED.

- If TMF is set to ABORT TASK or QUERY TASK, the TAG OF TASK TO BE MANAGED field specifies the TAG value from the COMMAND frame that contained the task to be aborted or checked. For all other TMF's, this field is ignored.

- If TMF is set to QUERY ASYNCHRONOUS EVENT, the Additional Response Information argument is set to 000000h for the response of FUNCTION COMPLETE. If the response is FUNCTION SUCCEED, the Additional Response Information argument is set as defined in Table 41.

Table 41 Additional Response Information argument for Query Async Event

Byte	Bit							
	7	6	5	4	3	2	1	0
0	RESERVED		UADE DEPTH		SENSE KEY			
1	ADDITIONAL SENSE CODE							
2	ADDITIONAL SENSE CODE QUALIFIER							

The UADE DEPTH is the number of pending unit attention conditions or deferred errors. It is defined as in Table 42.

The SENSE KEY field is the value of the SENSE KEY field in the highest-priority pending unit attention condition or deferred error.

The ADDITIONAL SENSE CODE field is the value of the ADDITIONAL SENSE CODE field in the highest-priority pending unit attention condition or deferred error.

The ADDITIONAL SENSE CODE QUALIFIER field is the value of the ADDITIONAL SENSE CODE QUALIFIER field in the highest-priority pending unit attention condition or deferred error

Table 42 UADE DEPTH field

Code	Description
00b	The combined number of unit attention conditions and deferred errors is unknown
01b	The combined number of unit attention conditions and deferred errors is one
10b	The combined number of unit attention conditions and deferred errors is greater than one
11b	Reserved

7.7.3 XFER_RDY Information Units

The XFER_RDY frame is sent by the Drive to request write data (i.e. out bound data) from the initiator.

Table 43 XFER_RDY Information Unit

Byte	Bit							
	7	6	5	4	3	2	1	0
0 - 3	REQUESTED OFFSET							
4 - 7	WRITE DATA LENGTH							
8 - 11	RESERVED							

- The REQUESTED OFFSET field contains the buffer offset of the segment of write data the Initiator may transmit to the Drive (using DATA frames). The requested offset shall be a multiple of four.
- The WRITE DATA LENGTH field contains the number of bytes of write data the Initiator may transmit to the Drive (using DATA frames) from the requested offset.

7.7.4 DATA Information Units

The DATA frame is sent by the Drive to the Initiator (in bound data) or by the Initiator to the Drive (out bound data).

Table 44 Data Information Unit

Byte	Bit							
	7	6	5	4	3	2	1	0
0 - (n-1)	DATA							

7.7.5 RESPONSE Information Units

The RESPONSE frame is sent by the Drive to the Initiator (in bound data) or by the Initiator to the Drive (out bound data).

Table 45 Response Information Unit

Byte	Bit							
	7	6	5	4	3	2	1	0
0-7	RESERVED							
8-9	MSB RETRY DELAY TIMER LSB							
10	RESERVED						Data Pres	
11	STATUS							
12 - 15	Reserved							
16 - 19	SENSE DATA LENGTH (n bytes)							
20 - 23	RESPONSE DATA LENGTH (m bytes)							
24 - (24+m)	RESPONSE DATA							
(24+m)-(23+m+n)	SENSE DATA							

The RETRY DELAY TIMER field contains the retry delay timer code which is defined as follows:

Table 46 RETRY DELAY TIMER field

Status Code	Retry Delay Timer Code	Description
BUSY	0000h	Same as normal busy
	0001h-FFEFh	The number of 100 milliseconds increments which Initiator should wait before sending another command to Drive
	FFF0h-FFFDh	RESERVED
	FFEFh	Initiator should stop sending commands to Drive
	FFFFh	Drive is not able to accept the command
	0000h	Same as normal busy
QUEUE FULL	0001h-FFEFh	Initiator should wait before sending another command to the Drive until: a) At least the number of 100 milliseconds increments indicated in the RETRY DELAY TIMER CODE field have elapse; or b) A command addressed to the Drive completes.
	FFF0h-FFFFh	RESERVED
GOOD	0000h-FFFFh	RESERVED
CHECK CONDITION	0000h-FFFFh	RESERVED
CONDITION MET	0000h-FFFFh	RESERVED
RESERVATION CONFLICT	0000h-FFFFh	RESERVED
ACA ACTIVE	0000h-FFFFh	RESERVED
TASK ABORT	0000h-FFFFh	RESERVED

- The DATAPRES field, which indicates the format and content of the STATUS field, SENSE DATA LENGTH field, RESPONSE DATA LENGTH field, RESPONSE DATA field, and SENSE DATA field.

Table 47 DATAPRES field

Value	DATAPRES Description
00b	NO DATA: no data present
01b	RESPONSE_DATA: response data present
10b	SENSE_DATA: sense data present
11b	RESERVED

Table 48 RESPONSE CODE

Byte	Bit							
	7	**6**	**5**	**4**	**3**	**2**	**1**	**0**
0 - 2	RESERVED							
3	RESPONSE CODE							

- RESPONSE CODES are defined as follows:

Table 49 RESPONSE DATA

Value	RESPONSE Code Description
00b	Task Management Function complete
02b	Invalid Frame
04b	Task Management Function not supported
05b	Task Management Function failed
08b	Task Management Function succeeded
09b	Invalid LUN
others	RESERVED

7.7.6 Sequences of SSP Information Units

SSP Information Units are used in conjunction with one another to execute SCSI commands. This section provides a brief overview of SAS SSP Information Unit sequences that would be required to complete a SCSI command.

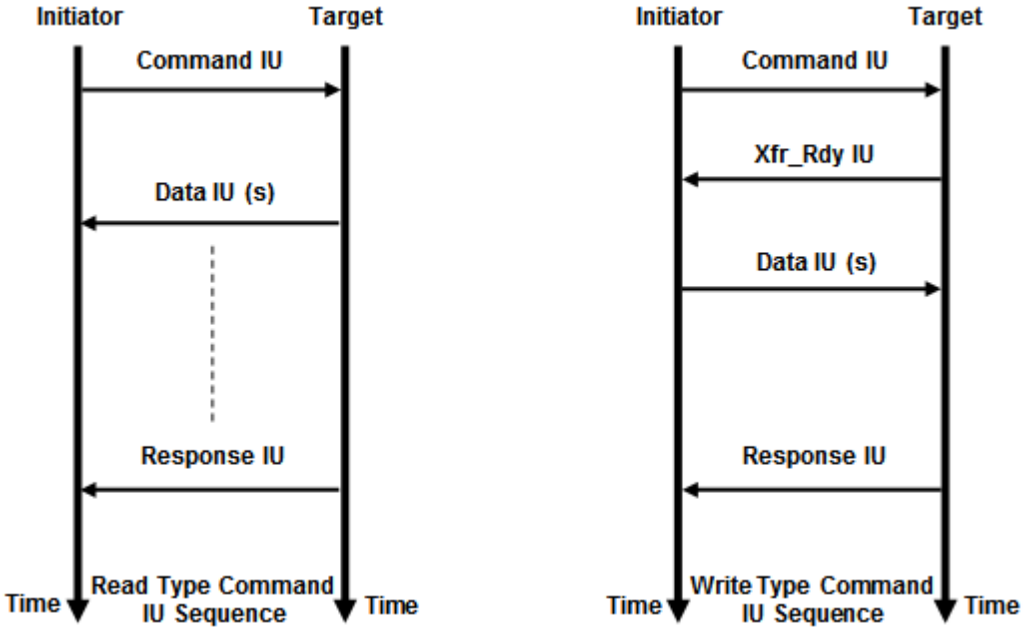

Figure 12 SSP Information Unit Sequences

7.7.7 Transport Layer Error Handling

This section defines the Transport layer error handling by the drive.

Table 50 Transport Layer Error Handling

Error	Error Handling Procedure
SSP Header Field Checking	Reserved fields in SSP frames are not checked.
Data Offset Error	If a DATA frame with an invalid Data Offset is received, the command associated with the DATA frame is aborted with Check Condition status and sense data corresponding to a DATA OFFSET ERROR is returned
I_T NEXUS Loss Timeout	If a connection cannot be established to an initiator before the I_T NEXUS LOSS timer expires (Mode Page 0x19), all commands from the initiator are internally aborted. The first new command received from the affected Initiator results in a CHECK CONDITION with sense data corresponding to I_T NEXUS LOSS OCCURRED.
Initiator Response Timeout	If DATA frames corresponding to an outstanding XFER_RDY frame are not received before the Initiator Response timer expires (Mode Page 0x19), the command is aborted with CHECK CONDITION status and sense data corresponding to INITIATOR RESPONSE TIMEOUT is returned for the affected command.
Data Overflow	If more data is received than requested via an XFER_RDY frame, the affected command is aborted with CHECK CONDITION status with sense data corresponding to TOO MUCH WRITE DATA is returned.
Invalid Target Port Transfer Tag	If a DATA frame is received and the TPTT is not set to the value used in the corresponding XFER_RDY frame, the frame is discarded. If a COMMAND or TASK frame is received with the TPTT set to a value other than 0xFFFF, a RESPONSE frame with RESPONSE_DATA set to INVALID FRAME is returned.
Invalid Frame Length	If a DATA frame is received with zero bytes of payload data, the frame is discarded. This is not considered an error. If a COMMAND/TASK frame that is too short is received, RESPONSE data corresponding to INVALID FRAME is returned. The additional CDB length field of a COMMAND frame is not checked for correctness. If a DATA frame is received with a payload greater than 1024 bytes, the frame is discarded and the command is aborted with CHECK CONDITION status and sense data corresponding to DATA_PHASE_ERROR is returned.

8 SCSI Command Set

Summaries of the SCSI commands supported by the drive are listed below.

Table 51 SCSI Commands Supported (part 1 of 2)

Code	Description
04h	FORMAT UNIT (04)
12h	INQUIRY (12)
4Ch	LOG SELECT (4C)
4Dh	LOG SENSE (4D)
15h	MODE SELECT (6) - (15)
55h	MODE SELECT (10) - (55)
1Ah	MODE SENSE (6) - (1A)
5Ah	MODE SENSE (10) - (5A)
5Eh	PERSISTENT RESERVE IN (5E),
5Fh	PERSISTENT RESERVE OUT (5F)
34h	PRE-FETCH (10) - (34)
90h	PRE-FETCH (16) - (90)
08h	READ (6) - (08)
28h	READ (10) - (28)
A8h	READ (12) - (A8)
88h	READ (16) - (88)
7Fh/09h	READ (32) - (7F/09)
3Ch	READ BUFFER (3C)
25h	READ CAPACITY (10) - (25)
9Eh/10h	READ CAPACITY (16) (9E/10)
37h	READ DEFECT DATA (10) - (37)
B7h	READ DEFECT DATA (12) - (B7)
3Eh	READ LONG (10) - (3E)
9Eh	READ LONG (16) - (9E)
07h	REASSIGN BLOCKS (07)
1Ch	RECEIVE DIAGNOSTICS RESULTS (1C)
17h	RELEASE (6) - (17)
57h	RELEASE (10) - (57)
A3h/05h	REPORT DEVICE IDENTIFIER (A3/05)
A0h	REPORT LUNS (A0)
A3h/0Ch	REPORT SUPPORTED OPERATION CODES (A3/0C)
A3h/0Dh	REPORT SUPPORTED TASK MANAGEMENT FUNCTIONS (A3/0D)
03h	REQUEST SENSE (03)
16h	RESERVE (6) - (16)
56h	RESERVE (10) - (56)
01h	REZERO UNIT (01)
48h	SANITIZE (48)
A2h	SECURITY PROTOCAL IN (A2h)
B5h	SECURITY PROTOCAL OUT (B5h)

Table 52 SCSI Commands Supported (part 2 of 2)

Code	Description
1Dh	SEND DIAGNOSTIC (1D)
A4h/06h	SET DEVICE IDENTIFIER (A4/06)
1Bh	START STOP UNIT (1B)
35h	SYNCHRONIZE CACHE (10) - (35)
91h	SYNCHRONIZE CACHE (16) - (91)
00h	TEST UNIT READY (00)
2Fh	VERIFY (10) - (2F)
AFh	VERIFY (12) - (AF)
8Fh	VERIFY (16) - (8F)
7Fh/0Ah	VERIFY (32) - (7F/0A)
0Ah	WRITE (6) - (0A)
2Ah	WRITE (10) - (2A)
AAh	WRITE (12) - (AA)
8Ah	WRITE (16) - (8A)
7Fh/0Bh	WRITE (32) - (7F/0B)
2Eh	WRITE AND VERIFY (10) - (2E)
AEh	WRITE AND VERIFY (12) - (AE)
8Eh	WRITE AND VERIFY (16) - (8E)
7Fh/0Ch	WRITE AND VERIFY (32) - (7F/0C)
3Bh	WRITE BUFFER (3B)
3Fh	WRITE LONG (10) - (3F)
9Fh	WRITE LONG (16) - (9F/11)
41h	WRITE SAME (10) - (41)
93h	WRITE SAME (16) - (93)
7Fh/0Dh	WRITE SAME (32) - (7F/0D)

8.1 SCSI Control Byte

The Control Byte is the last byte of every CDB. The format of this byte is shown below.

Table 53 SCSI Control Byte

Bit							
7	**6**	**5**	**4**	**3**	**2**	**1**	**0**
VU = 0		Reserved = 0				FLAG	LINK

VU = Vendor Unique.

*Note: * - The drive ignores the link bit and flag bit in the CDB.*

8.2 Abbreviations

These abbreviations are used throughout the following sections:

Table 54 Abbreviations

LUN	Logical Unit Number. An encoded three bit identifier for the logical unit.
VU	Vendor Unique bits
LBA	Logical Block Address
RSVD	Reserved
MSB	Most Significant Byte
LSB	Least Significant Byte

8.3 Byte ordering conventions

In this specification, where it is not explicitly stated, all multi-byte values are stored with the most significant byte first. For example, in a 4 byte field, byte 0 will contain the MSB and byte 3 the LSB.

8.4 FORMAT UNIT (04)

Table 55 FORMAT UNIT

Byte	Bit							
	7	6	5	4	3	2	1	0
0	Command Code = 04h							
1	FMTPINFO		LONG LIST=0	FMTDATA	CMPLIST	Defect List Format		
2	VU = 0							
3	Reserved = 0							
4	Reserved = 0						FFMT	
5	VU = 0		Reserved = 0				FLAG	LINK

- **FMTPINFO (Format Protection Information**) in combination with the Protection Field Usage field in the Parameter List Header specifies whether or not the drive enables or disables the use of protection information (see table defined in the Parameter List Header section).
- **FmtData** set to one specifies that a Data Out phase follows the Command phase. The Data Out phase consists of a Parameter List header, optionally followed by an Initialization Pattern Descriptor, optionally followed by a Defect List. If FmtData=0, the following defaults are assumed: DPRY=0, DCRT=1, STPF=1, IP=0, DSP=0, Immed=0.
- **CmpLst**
  - Set to one specifies that the Grown Defect List (GList) existing prior to the issuance of the Format Unit command be discarded. If provided, the DList then becomes the GList. Following these operations, the Drive will be formatted with the PList and GList.
  - Set to zero specifies that the GList existing prior to the issuance of the Format Unit command is retained. If provided, the DList is combined with the GList to become the new GList. Following these operations, the Drive will be formatted with the PList and GList.

  Note: The drive manages two internal defect lists and one external. The Plist is created at time of manufacture. The Glist is built after manufacture by the Initiators' use of the REASSIGN BLOCK command and the Automatic Reallocate functions. The Dlist is an external list. It is supplied by the Initiator in the Data Out phase of the FORMAT UNIT command.
- **Defect List Format** specifies the format of the defect descriptor transferred to the Target when FmtData bit is set to one. The Target supports the following three defect descriptor formats for the FORMAT UNIT command:

Table 56 Defect descriptor format

Format	Description
000b	Block format (not supported)
100b	Bytes From Index format
101b	Physical Sector format

If the FmtData bit is set to zero, this field must also be zero. Otherwise the command will complete with a CHECK CONDITION with a sense key of *Illegal Request* and an additional sense code of *Invalid Field in CDB*.

Note: *It is recommended that the MODE SELECT command be issued prior to the FORMAT UNIT command to specify parameters that affect the formatting process.*

The Block Length parameter of the Mode Select Parameter List's Block Descriptor is used during formatting and is saved following a successful format operation. If a MODE SELECT command has not been issued since the last reset or start-up (bring-up) sequence, then the Block Length from the previous format operation is used.

FFMT - The fast format field supports the following modes:

Table 57 FFMT field description

Code	Description
00b	Perform defect management and initialize media to the new format.
01b	Change block size only. May only be used on transitions of physically compatible size such as between 512 emulated and 4096. For incompatible size transitions, the command will complete with a CHECK CONDITION with a sense key of Illegal Request and an additional sense code of Invalid Field in CDB. If the error reported is Key/code/qualifier 5/24/09, need to discard the GList beforehand. If the following options are enabled command shall terminate with INVALID FAST FORMAT COMBINATION. Options: CmpList, Merge GList PList, or Defect List length is non zero, If the current block size is 512 and format unit (01b) is received and if there is only partial data available in a Media Block (4K) due to media errors, those LBAs in the defect sectors are marked as hard error. Any following read commands on those LBAs shall terminate with CHECK CONDITION with KCQ 03/11/00 (UEC =0xF7A7)
10b	Perform defect management but do not initialize the media. May result in any medium error on read before write.
11b	Reserved

Subsequent to receiving a FORMAT UNIT command, the Target responds to commands as follows:

- All commands except REQUEST SENSE and INQUIRY return *Check Condition* status, while the format operation is an active I/O process.
- When tagged queuing is enabled (DQue = 0), all commands except REQUEST SENSE and INQUIRY return *Queue Full* status, while the FORMAT UNIT command is a queued I/O process.
- When tagged queuing is disabled (DQue = 1), all commands except REQUEST SENSE and INQUIRY return *Busy* status, while the FORMAT UNIT command is a queued I/O process
- If a REQUEST SENSE command is received while a format operation is an active I/O process, the Target returns *Good* status. The sense key is set to *Not ready* and the additional sense code and qualifier is set to *Format In Progress*.
- If an INQUIRY command is received while a format operation is an active I/O process, the Target returns *Good* status and Inquiry data as requested.

The format operation must complete successfully for the Drive to be usable. If the command is interrupted by a reset, power down, or an unrecoverable error, the Drive enters a degraded mode of operation in which reading and writing are prohibited. To exit the degraded mode, another FORMAT UNIT command must be sent by the Initiator and completed successfully by the Target.

The FORMAT UNIT command sets the *Unit Attention Condition* for all Initiators except the one that issued the FORMAT UNIT command.

8.4.1 Parameter List Header

Following is the format of the Parameter List Header sent during the data out phase when FmtData is set to one.

Table 58 Format of the Short Parameter List Header

Byte	Bit							
	7	6	5	4	3	2	1	0
0	Reserved = 0					Protection Field Usage		
1	FOV	DPRY	DCRT	STPF =1	IP	Obsolete	Immed	Vendor-specific
2 -3	(MSB) DEFECT LIST LENGTH (LSB)							
4-n	Initialization Pattern Descriptor							
(n+1) - m	Defect Descriptor							

Table 59 Format of the Long Parameter List Header

Byte	Bit							
	7	6	5	4	3	2	1	0
0	Reserved = 0					Protection Field Usage		
1	FOV	DPRY	DCRT	STPF =1	IP	Obsolete	Immed	Vendor-specific
2	Reserved							
3	P_I_INFORMATION = 0				PROTECTION INTERVAL EXPONENT = 0			
4...7	(MSB) DEFECT LIST LENGTH (LSB)							
8-n	Initialization Pattern Descriptor							
(n+1) - m	Defect Descriptor							

- **Protection Field Usage:** in combination with the format protection information (FMTPINFO) field in the CDB specifies whether or not the drive enables or disables the use of protection information:

Table 60 Format of the Long Parameter List Header

FMTPINFO	Protection Field Usage	Description
00h	000h	The drive will be formatted to type 0 protection
01h	xxxh	Check Condition status will be returned with the sense key set to Illegal Request and the additional sense code set to Invalid Field in the CDB.
10h	000h	The drive will be formatted to type 1 protection
11h	000h	The drive will be formatted to type 2 protection
11h	001h	Type 3 protection is not supported - Check Condition status will be returned with the sense key set to Illegal Request and the additional sense code set to Invalid Field in the Parameter List

All other combinations of FMTPINFO and Protection Field Usage will result in Check Condition status to be returned with the sense key set to Illegal Request and the additional sense code set to Invalid Field in the Parameter List.

Type 0 protection specifies that the drive shall disable the use of protection information and format to the block size specified. Following a successful format, the PROT_EN bit in the READ CAPACITY (16) parameter data will indicate that protection information is disabled.

Type 1 and type 2 protection specifies that the drive shall enable the use of protection information and format to the block size specified + 8 (e.g., if the block length is 4096, then the formatted block length is 4104). See format of data below. When protection information is written during a FORMAT UNIT command, protection information shall be written with a default value of all 0xFF's. Following a successful format, the PROT_EN bit in the READ CAPACITY (16) parameter data will indicate that protection information is enabled and the P_TYPE field in the READ CAPACITY (16) parameter data will indicate the protection type.

Table 61 Data Format with Protection field

Byte	Bit							
	7	6	5	4	3	2	1	0
0... n	User Data							
n... n+1	Logical Block Guard							
n+2... n+3	Logical Block Application Tag							
n+4... n+7	Logical Block Reference Tag							

- **The Logical Block Guard field** contains a CRC that covers the preceding user data. This field is generated/checked per the SBC standard.
  The Logical Block Application Tag field is modifiable by the initiator if the ATO bit is set to zero in mode page 0x0A. If the ATO bit is set to one, then the initiator shall not modify the Logical Block Application Tag field. This field is generated/checked per the SBC standard.
- **The Logical Block Reference Tag field** is generated/checked depending on protection types. With Type 1 protection, the Logical Block Reference Tag in the first logical block of the data transfer shall contain the least significant four bytes of the LBA contained in the Logical Block Address field of the command. Subsequent blocks shall contain the previous logical block reference tag plus one. With Type 2 protection, the Logical Block Reference Tag in the first logical block of the data transfer shall contain the value in the Expected Initial Logical Block Reference Tag field of the command. Subsequent blocks shall contain the previous logical block reference tag plus one.
- **FOV** (Format Options Valid) bit set to zero indicates that the Target should use its default settings for the DPRY (0), DCRT (1), STPF (1), IP (0), and DSP (1) bits. These bits must all be set to zero in the Parameter List Header when FOV=0, or the command will be terminated with Check Condition status, sense key of Illegal Request, and additional sense code of Invalid Field in Parameter List. FOV=1 indicates that the values set in DPRY, DCRT, STPF, IP, and DSP will be defined as specified below.
- **DPRY** (Disable Primary) bit set to zero indicates that the Target does not use portions of the medium identified as defective in the primary defect Plist for Initiator addressable logical blocks. If the Target cannot locate the Plist or it cannot determine whether a Plist exists, the Target terminates the FORMAT UNIT command as described for STPF=1. A DPRY bit set to one indicates that the Target does not use the Plist to identify defective areas of the medium. The Plist is not deleted. DPRY must be set to 0 when DCRT is set to 0.
- **DCRT** (Disable Certification) bit set to zero indicates that the Target performs a medium certification operation and generates a Certification List (Clist), and adds the Clist to the Glist. DPRY must be set to 0 when DCRT is set to 0. A DCRT bit of one indicates that the Target does not generate a Clist or perform a certification process.

  Note: Since the DCRT bit is part of the Data Out phase that follows the FORMAT command, the FCERT bit in Mode Page 0 is provided to control certification when the FORMAT command is issued with no Data Out phase. If a FORMAT command is issued with a Data Out phase then FCERT is ignored.
- **STPF** (Stop Format) bit must be set to one. If one or both of the following conditions occurs, the Target terminates the FORMAT UNIT command with *Check Condition* status. The sense key is set to *Medium Error* and the additional sense code is set to *Defect List Not Found* if the first condition occurred or to *Defect List Error* if the second condition occurred.
  - The Target cannot locate a required Dlist nor determine that the list exists.
  - The Target encounters an unrecoverable error while accessing a required Dlist.
- **IP** (Initialization Pattern) bit set to zero specifies that an initialization pattern descriptor is not included and all customer data will be initialized to zeroes. An IP bit of one specifies that an Initialization Pattern Descriptor is included in the FORMAT UNIT parameter list following the parameter list header.

8.4.2 Initialization Pattern

Table 62 Initialization Pattern Descriptor

Byte	Bit							
	7	6	5	4	3	2	1	0
0	IP Modifier = 0		SI	Reserved = 0				
1	Initialization Pattern Type = 0 or 1							
2 - 3	Initialization Pattern Length (n-3)							
4	Initialization Pattern							
...	...							
n	Initialization Pattern							

- **IP Modifier** must be set to 0, indicating that the drive will not modify the initialization pattern.
- **SI** (Security Initialize) bit set to one specifies that all customer data sectors, including those that have been previously reassigned, will be initialized. SI set to zero specifies that only the current customer accessible sectors will be formatted.
- **Initialization Pattern Type**
  - Type of 0 will use a default initialization pattern.
  - Type of 1 specifies that the Initialization Pattern specified shall be repeated as required to fill each logical block.
- **Initialization Pattern** Length specifies the number of bytes that follow in the Initialization Pattern field, and must be less than or equal to the current block size, and non-zero.
  - If Initialization Pattern Type is 0 and the Initialization Pattern Length is not set to 0, Check Condition status will be returned, with the sense key set to Illegal Request and the additional sense code set to Invalid Field in Parameter List
  - If Initialization Pattern Type is 1 and the Initialization Pattern Length is set to 0, Check Condition status will be returned, with the sense key set to Illegal Request and the additional sense code set to Invalid Field in Parameter List.
- **DSP** (Disable Saving Parameters) bit when zero indicates the target is to save all the current MODE SELECT saveable parameters during the format operation. When the bit is one, the target is not to save the current MODE SELECT saveable parameters.
- **Immed** (Immediate) bit set to zero requests that status be returned at the end of the format operation. An immediate bit set to one requests that status be returned immediately following CDB validation and transfer of data in the Data Out phase. If the format operation, with the immediate bit set to one, terminates in error, DEFERRED ERROR SENSE data is generated.
- **Defect List Length** field specifies the total length in bytes of the defect descriptors that follow (not including the Initialization Pattern Descriptor, if any). Up to 1024 defect descriptors are allowed. The Defect List Length must be equal to four times the number of defect descriptors for BLOCK format, or eight times the number of defect descriptors for BYTES FROM INDEX and PHYSICAL SECTOR formats. Otherwise the command is terminated with Check Condition status with the sense key set to Illegal Request and the additional sense code set to Invalid Field in Parameter List.

8.4.3 Defect Descriptor

The drives supports two of the three available defect descriptor formats. Entries are not required to be in ascending order. If an entry does not correspond to a valid user addressable media location, the command terminates with Check Condition status with the sense key set to Illegal Request and the additional sense code set to Invalid Field in Parameter List.

8.4.3.1 Block Format - 000b (not supported)

Format of the Dlist sent during the data out phase when Dlist Format is Block format (000b) and FmtData is set to one.

Table 63 Defect Descriptor - Block Format (for n + 1 defects)

Byte	Bit							
	7	6	5	4	3	2	1	0
0 - 3	(MSB) Defective Logical Block Address (LSB)							
4n 4n+1 4n+2 4n+3	(MSB) Defective Logical Block Address n (LSB)							

The Block format of the Dlist is the LBA of each defective sector.

***Note**: If a Defective LBA entry, when converted to a physical sector, is equal to the physical sector of a Plist entry and DPRY = 1, then the entry is not added to the Glist.*

8.4.3.2 Bytes From Index Format - 100b

Format of the Dlist sent during the data out phase when Dlist Format is Bytes from Index format (100b) and FmtData is set to one.

Table 64 Defect Descriptor - Bytes from Index Format (for n = 1 defects)

Byte	Bit							
	7	6	5	4	3	2	1	0
0 - 2	(MSB) Cylinder Number of Defect (LSB)							
3	Head Number of Defect							
4 - 7	(MSB) Defect Bytes from Index (LSB)							
8n 8n + 1 8n + 2	(MSB) Cylinder Number of Defect n (LSB)							
8n + 3	Head Number of Defect n							
8n + 4 8n + 5 8n + 6 8n + 7	(MSB) Defect (n) Bytes from Index (LSB)							

Each defect descriptor for the Bytes from Index format specifies that the sector containing this byte be marked defective. The defect descriptor is comprised of the cylinder number of the defect, the head number of the defect, and the number of the defect byte relative to index.

Note: If a Byte from Index entry, when converted to a physical sector, is equal to the physical sector of a Plist entry and DPRY = 1, then the entry is not added to the Glist.

8.4.3.3 Physical Sector Format - 101b

Format of the Dlist sent during the data out phase when Dlist Format is Physical Sector format (101b) and FmtData is set to one.

Table 65 Defect Descriptor - Physical Sector Format (for n + 1 defects)

Byte	Bit							
	7	6	5	4	3	2	1	0
0 1 2	(MSB) Cylinder Number of Defect (LSB)							
3	Head Number of Defect							
4 5 6 7	(MSB) Defect Sector Number (LSB)							
8n 8n + 1 8n + 2	(MSB) Cylinder Number of Defect n (LSB)							
8n + 3	Head Number of Defect n							
8n + 4 8n + 5 8n + 6 8n + 7	(MSB) Defect (n) Sector Number (LSB)							

Each defect descriptor for the Physical Sector format specifies a defective sector. The defect descriptor is comprised of the cylinder number of the defect, the head number of the defect, and the defect's sector number.

Note: If a Physical Sector entry, when converted to a physical sector, is equal to the physical sector of a Plist entry and DPRY = 1, then the entry is not added to the Glist.

8.5 GET PHYSICAL ELEMENT STATUS - (9E)

8.5.1 GET PHYSICAL ELEMENT STATUS command overview

The GET PHYSICAL ELEMENT STATUS command (see Table 66) requests that the device server return status information for physical elements within the logical unit.

Table 66 GET PHYSICAL ELEMENT STATUS command

Byte	Bit							
	7	6	5	4	3	2	1	0
0	Command Code = 9Eh							
1	Reserved Action (17h)						Service	
6-9	(MSB) Starting Element (LSB)							
10-13	(MSB) Allocation Length (LSB)							
14	Filter		Reserved		Report Type			
15	Control							

The OPERATION CODE field and the SERVICE ACTION field are defined in SPC-5 and shall be set to the values shown in table 56 for the GET PHYSICAL ELEMENT STATUS command.
The STARTING ELEMENT field specifies the element identifier of the first physical element addressed by this command.
The ALLOCATION LENGTH field is defined in SPC-5. In response to a GET PHYSICAL ELEMENT STATUS command, the device server may send less data to the Data-In Buffer than is specified by the allocation length. If, in response to a GET PHYSICAL ELEMENT STATUS command, the device server does not send sufficient data to the Data-In Buffer to satisfy the requirement of the application client, then, to retrieve additional information, the application client may send additional GET PHYSICAL ELEMENT STATUS commands with different starting element values.
The FILTER field restricts the physical element status descriptors to return, as defined in Table 67.

Table 67 FILTER field

Code	Description
00b	All physical status descriptors as specified by the other fields in the CDB.
01b	Only physical element status descriptors for which the value of the PHYSICAL ELEMENT HEALTH field (see 5.7.2.2) is: a) greater than or equal to 65h and less than or equal to CFh (i.e., outside manufacturer's specification limit); b) equal to FDh (i.e., all operations associated with storage element depopulation have completed and one or more completed with error); c) equal to FEh (i.e., an operation associated with storage element depopulation is in progress);or a) d) equal to FFh (i.e., all operations associated with storage element depopulation have completed without error).
All others	Reserved

The REPORT TYPE field specifies the type of physical element status descriptors to return as defined in Table 68.

Table 68 REPORT TYPE field

Code	Description
00b	Return descriptors for physical elements, based on the FILTER field
01b	Return descriptors for storage elements, based on the FILTER field
All others	Reserved

The CONTROL byte is defined in SAM-5.

8.5.2 GET PHYSICAL ELEMENT STATUS parameter data

8.5.2.1 GET PHYSICAL ELEMENT STATUS parameter data overview

The GET PHYSICAL ELEMENT STATUS parameter data (see Table 69) contains a 32-byte header followed by zero or more physical element status descriptors.

Table 69 GET PHYSICAL ELEMENT STATUS parameter data

Byte	Bit							
	7	6	5	4	3	2	1	0
0…3	(MSB) NUMBER OF DESCRIPTORS (LSB)							
4…7	(MSB) NUMBER OF DESCRIPTORS RETURNED (LSB)							
8…11	(MSB) IDENTIFIER OF ELEMENT BEING DEPOPULATED (LSB)							
12…31								
Reserved								
32…63	(MSB) physical element status descriptor [first] (LSB)							
…								
n-32 … n	(MSB) physical element status descriptor [last] (LSB)							

The NUMBER OF DESCRIPTORS field shall contain the number of descriptors in the element descriptors list. The element descriptors list is a list of physical elements that:

a) meet the requirements of the REPORTING OPTIONS field;
b) meet the requirements of the FILTER field; and
c) have an element identifier that is greater than or equal to the element identifier specified by the STARTING ELEMENT field in the CDB.

The contents of the NUMBER OF DESCRIPTORS field are not altered based on the allocation length.

The NUMBER OF DESCRIPTORS RETURNED field contains the number of valid physical element status descriptors returned in the parameter data.

The IDENTIFIER OF ELEMENT BEING DEPOPULATED field contains the element identifier of the element that has a physical element health set to FEh (i.e., an operation associated with storage element depopulation is in progress). If the value of this field is set to zero, then no operation associated with storage

element depopulation is in progress.

Due to processing considerations outside the scope of this standard, two GET PHYSICAL ELEMENT STATUS commands with identical values in all CDB fields may result in two different values in the NUMBER OF DESCRIPTORS field.

The physical element status descriptors shall be sorted in ascending order of the element identifier.

8.5.2.2 Physical Element Status descriptor

The Physical Element Status descriptor (see Table 70) contains status information for a physical element.

Table 70 Physical Element Status descriptor format

Byte	Bit							
	7	6	5	4	3	2	1	0
0…3	Reserved							
4…7	(MSB) ELEMENT IDENTIFIER (LSB)							
8…13	Reserved							
14	PHYSICAL ELEMENT TYPE							
15	PHYSICAL ELEMENT HEALTH							
16..23	(MSB) ASSOCIATED CAPACITY (LSB)							
24…31	Reserved							

The ELEMENT IDENTIFIER field contains the non-zero identifier of the physical element (e.g., storage element) associated with this Physical Element Status descriptor. The PHYSICAL ELEMENT TYPE field indicates the type of the physical element associated with this Physical Element Status descriptor, as described in Table 71.

Table 71 PHYSICAL ELEMENT TYPE field

Code	Description
01b	storage element
All others	Reserved

The PHYSICAL ELEMENT HEALTH field indicates the health of the physical element associated with this Physical Element Status descriptor, as described in Table 72.

Table 72 PHYSICAL ELEMENT HEALTH field

Code	Description
00h	not reported
01h to 63h[a]	within manufacturer's specification limits
64h	at manufacturer's specification limit
65h to CFh	outside manufacturer's specification limit
D0h to FCh	Reserved
FDh	All operations associated with storage element depopulation have completed and one or more completed with error.
FEh	An operation associated with storage element depopulation is in progress.
FFh	All operations associated with storage element depopulation have completed without error.
[a] the device may implement a subset of values	

The ASSOCIATED CAPACITY field indicates the the number of logical blocks by which the capacity of the device is reduced if the physical element associated with this Physical Element Status descriptor becomes depopulated. A value of FFFF_FFFF_FFFF_FFFFh indicates that the number of logical blocks by which the capacity is reduced is not specified.

8.6 INQUIRY (12)

Table 73 INQUIRY (12)

Byte	Bit							
	7	6	5	4	3	2	1	0
0	Operation Code = 12h							
1	Reserved = 0						CmdDt =0	EVPD
2	Page Code							
3 - 4	Allocation Length							
5	VU = 0		Reserved = 0				FLAG	LINK

The INQUIRY command requests the parameters of the Target to be sent to the Initiator.
An **EVPD** bit of one specifies that the target return the vital product data page identified by the Page Code field in the CDB the available VPD pages are defined in the addendum provided for each different drive model in the section entitled Inquiry Data Format.

The **Page Code** specifies which page of vital product data information the drive shall return.

Table 74 Page Code descriptions

EVPD	PAGE CODE	Description
0	0	The Target returns the standard INQUIRY data.
0	Non Zero	The drive returns *Check Condition* status with the sense key of *Illegal Request* and the additional sense code of *Invalid Field in CDB*.
1	Non Zero	The drive returns the vital product data of page code requested.

Allocation Length specifies the number of bytes that the Initiator has allocated for INQUIRY data to be returned. An allocation length of zero implies that no data is to be returned. The Target will terminate the DATA IN phase when all available INQUIRY data has been transferred or when allocation length bytes have been transferred, whichever is less.

Note: If an INQUIRY command is received from an Initiator with a pending unit attention condition (before the target reports Check Condition status), the Target processes the INQUIRY command. The unit attention condition is not cleared by this action.

Note: The INQUIRY command is a Priority command and is not queued.

Note: The inquiry data is set at the time of manufacture and will not change, with the following exceptions:

- Product Revision Level (EVPD=0) can be changed when microcode is downloaded with the Write Buffer command.
- The information returned for EVPD=1, Page Code = 3 is not fixed.

Note: The inquiry data returned when media is not available will not be complete.

Byte 0 of the returned data on an INQUIRY command is the same no matter which page(s) is (are) returned. This description is to be used for all the following page definitions.
The Peripheral Qualifier field of zero (0) indicates that the peripheral device is currently connected to this logical unit.
A Peripheral Device Type field of zero (0) indicates that this device is a Direct Access Storage Device (DASD).

8.6.1 Inquiry Data

Fields with a value shown inside quotes (e.g. Value ='xyz') are character fields. Character fields are alphanumeric and represented in ASCII. A value not in quotes is a numeric value.

8.6.1.1 Inquiry Data Format - EVPD = 0, Page Code = 0

Table 75 Inquiry Data- EVPD = 0

Byte	Bit							
	7	6	5	4	3	2	1	0
0	Qualifier = 0			Peripheral Device Type = 0h				
1	RMB=0	Reserved=0						
2	Version = 7							
3	Obsolete	Obsolete	Norm ACA=0	HiSup=1	Response Data Format = 2			
4	Additional Length = 159 (9Fh)							
5	SCCS=0	ACC=0	TPGS=00b		3PC=0	Reserved = 0		Protect=1
6	Obsolete	EncSer=0	Port	MultiP=1	Obsolete			RSVD = 0
7	Obsolete	Obsolete	RSVD=0	RSVD=0	Obsolete	Obsolete	CmdQue= 1	RSVD = 0
8-15	Vendor ID = "WDC" (ASCII)							
16-31	Product ID (ASCII)							
32-35	Product Revision Level (ASCII)							
36-43	Unit Serial Number (ASCII)							
44-95	Reserved = 0							
96-145	Copyright Notice (ASCII)							
146-163	Reserved=0							

- **Qualifier** is set to zero to indicate that the LUN specified is currently supported. Qualifier is set to 011b when the LUN specified is not present [1]
- **Peripheral Device Type** is set to 0 to indicate that the device is Direct Access.
- **Removal Media Bit (RMB)** is always set to zero to indicate no removal media exists.
- **Version** indicates the level of the ANSI standard that the product supports. The drive supports ANSI SPC-5.
- **NormACA** (Normal ACA) field of 0 indicates the drive does not support setting the NACA bit to one in the Control Byte of the CDB as defined in the SAM.
- **HiSup** bit of 1 indicates that the drive uses the hierarchical addressing model to assign LUNs to logical units.
- **Response Data Format** is set to two to indicate that the INQUIRY Data Format as specified in the ANSI SCSI version 2 is supported by the Target.
- **Additional Length** indicates the number of bytes of INQUIRY information that follows.
- **SCCS** bit of zero indicates that the device does not contain an embedded storage array controller component.
- **ACC** bit of zero indicates that no access controls coordinator is addressed through this logical unit.
- **TGPS** field of zero indicates that the device does not support asymmetric logical unit access.
- **3PC** bit of zero indicates that the device does not support third-party copy commands.
- **Protect** bit of one indicates that the drive supports protection information
- **EncSer** (Enclosure Services) bit of 0 indicates that the Target does not contain an embedded enclosure services component.

[1] If an INVALID LUN is specified, a *Check Condition* status will be returned for all commands except INQUIRY and REQUEST SENSE.

- **Port** bit of 0 indicates that the drive received the Inquiry command on port A, while a Port bit of 1 indicates that the drive received the Inquiry command on port B.
- **MultiP** (MultiPort) bit of 1 indicates that the Target has multiple ports and implements multi-port requirements.
- **CmdQue** is set to one to indicate that the drive supports command queuing.
- **Vendor ID** is WDC padded with ASCII blanks.
- **Product ID** is specified
- **Product Revision Level** indicates the level of microcode.
- **Unit Serial Number** contains the drive serial number.

8.6.1.2 Inquiry Data Format - EVPD = 1, Page Code - 00h

Table 76 Inquiry Data - EVPD = 1 (Page Code = 00h)

Byte	Bit							
	7	6	5	4	3	2	1	0
0	Qualifier = 0			Peripheral Device Type = 0h				
1	Page Code = 00h							
2	Reserved = 0							
3	Page Length = 10h							
4	Supported Page Code - 00h							
5	Supported Page Code - 03h							
6	Supported Page Code - 80h							
7	Supported Page Code - 83h							
8	Supported Page Code - 86h							
9	Supported Page Code - 87h							
10	Supported Page Code - 88h							
11	Supported Page Code - 8Ah							
12	Supported Page Code - 8Dh							
13	Supported Page Code - 90h							
14	Supported Page Code - 91h							
15	Supported Page Code - B0h							
16	Supported Page Code - B1h							
17	Supported Page Code - B2h							
19	Supported Page Code - D1h							
20	Supported Page Code - D2h							

- **Qualifier** is set to zero to indicate that the LUN specified in the Command Block is currently supported.
- **Peripheral Device Type** is set to 0 to indicate that the device is Direct Access.
- **Page Code** is set to 0, and this field contains the same value as in the page code field of the INQUIRY command descriptor block.
- **Page length** specifies the length of the following page data.
- **Supported Page Code** field contains the Page Codes supported by the Target. The list is in ascending order.

8.6.1.3 Inquiry Data Format - EVPD = 1, Page Code - 03h

Table 77 Inquiry Data - EVPD = 1 (Page Code = 03h)

Byte	Bit							
	7	6	5	4	3	2	1	0
0	Qualifier = 0			Peripheral Device Type = 0				
1	Page Code = 03h							
2-3	Page Length = 268 (10Ch)							
4	ASCII Fields Length = 00h							
5-7	Reserved = 0							
8-23	Reserved = 0							
24-35	ASCII uCode Identifier							
36-39	ASCII Servo P/N							
40-41	Major Version							
42-43	Minor Version							
44-46	User Count							
47	Version							
48-51	Build Number							
52-75	Build Date String							
76-83	Interface Speed							
84-91	Product ID							
92-99	Interface ID							
100-107	Code Type							
108-119	User Name							
120-135	Machine Name							
136-167	Directory Name							
168-171	Operating State							
172-175	Functional Mode							
176-179	Degraded Reason							
180-183	Broken Reason							
184-187	Code Mode							
188-191	Flash Code Revision Level							
192-195	Compatibility Version							
196-271	Repository Hashes							

- **Qualifier** is set to zero to indicate that the LUN specified in the Command Block is currently supported.
- **Peripheral Device Type** is set to 0 to indicate that the device is Direct Access.
- **Page Code** is set to the value of the page code field in the CDB.
- **Page Length** field specifies the length (in bytes) of the vendor unique VPD information (bytes 4 - 163). If the allocation length of the CDB is too small to transfer all the data, the Page Length field is not adjusted to reflect the truncation.
- **ASCII uCode Identifier** contains the drive's microcode identifier. The field is alphanumeric (ASCII), left aligned, and the unused bytes are ASCII spaces (20h).
- **ASCII Servo P/N** contains the part number of the Servo microcode installed on the drive. This field is hex numeric

ASCII (i.e., the characters will be in the set 0...9, A...F).

- **Major Version** and **Minor Version** are version numbers of the code loaded on the drive.
- **User Count** is the number of times the code has been built since the master build.
- **Version** is the current version of this page's layout.
- **Interface Speed** is the current negotiated link rate on the Initiator's Port.
- **Build Number** is the master build version number.
- **Build Date String** is the date the code on the drive was built, in an extended string format.
- **Product ID** is the name of the product this code is for.
- **Interface ID** is the interface type and serial interface speed (e.g. SAS 6Gbps or FCAL 4Gbps) of the code.
- **Code Type** is the intended use of the this code. (e.g. local, released, test)
- **User Name** is the username of the person who built this version of the code.
- **Machine Name** is the workstation on which this version of the code was built.
- **Directory Name** is the last 32 characters of the directory from where this code was built.
- **Operating State** is the drive operating state. The least significant bit contains the following:

Table 78 Operating State

0 = OM_BROKEN	We have detected a hardware failure.
1 = OM_DEGRADED	We have a soft failure; i.e., incomplete format. Motor is still spinning.
2 = OM_INACCESSIBL	Drive is good but motor is stopped.
3 = OM_STARTING	Motor is starting.
4 = OM_SPINNING	Motor is started but reserved area is not loaded yet.
5 = OM_NORMAL	Drive is spinning and ready to read/write.
6 = OM_POWERSAVE	Drive is ready but has entered power save mode.
7 = OM_STOPPED	Drive has come ready but now has been stopped.
8 = OM_NOTIFY	Drive is good but NOTIFY has not arrived (SAS)
9 = OM_WAKEUP	Similar to OM_STARTING, but LUN BECOMING READY during spinup is not reported
10 = OM_NOTIFY_WAKEUP	Similar to OM_NOTIFY, but next transition is to OM_WAKEUP

- **Functional Mode** is the drive functional mode. The least significant byte (0x0000000n) contains the following:

Table 79 Functional Mode

0 = OM_NORMAL_MODE	Not in special or recovery mode.
1 = OM_SPECIAL_CMD	Special command mode on.

- **Degraded Reason** (UECType) is why the file is in a degraded mode; i.e., how to exit this mode.
- **Broken Reason** (UECType) is why the drive believes the hardware is broken.
- **Code Mode** is the type of code the drive is running. The least significant bit contains the following:

Table 80 Code Mode

0 = OM_FLASH	Drive is running flash code
1 = OM_FLASH_OVERLAY	Drive is running flash overlay code
2 = OM_DISK	Drive is running code that has been loaded from disk
3 = OM_TRANSIENT	Drive is running code that has been downloaded but not saved

- **Flash Code Revision Level** is the revision level of the code in flash.
- **Compatibility Version** is a Revision that is used to enforce incompatibility limits.
- **Repository Hashes** is a marker of the code used for the build.

8.6.1.4 Inquiry Data Format - EVPD = 1, Page Code - 80h

Table 81 Inquiry Data - EVPD = 1 (Page Code = 80h)

Byte	Bit							
	7	6	5	4	3	2	1	0
0	Qualifier = 0			Peripheral Device Type = 0				
1	Page Code = 80h							
2	Reserved = 0							
3	Page Length = 16 (10h)							
4-19	Serial Number (ASCII)							

- **Qualifier** is set to zero to indicate that the LUN specified in the Command Block is currently supported.
- **Peripheral Device Type** is set to 0 to indicate that the device is Direct Access.
- **Page Code** is set to the value of the page code field in the CDB.
- **Page Length** is set to 16, and this field specifies the length of the following page data.
- **Serial Number** gives the drive serial number, right aligned.

8.6.1.5 Inquiry Data Format - EVPD = 1, Page Code - 83h

Table 82 Inquiry Data Format - EVPD = 1, (Page Code - 83h) (part 1 of 2)

Byte	Bit							
	7	6	5	4	3	2	1	0
0	Qualifier = 0			Peripheral Device Type = 0				
1	Page Code = 83h							
2	Reserved = 0							
3	Page Length = 72 (48h)							
4	Protocol Identifier = 0h				Code Set = 1			
5	PIV=0	RSVD	Association=0		Identifier Type = 3			
6	Reserved = 0							
7	Identifier Length = 8							
8-15	(MSB) LUN (World Wide ID) (LSB)							
16	Protocol Identifier = 6h				Code Set = 1			
17	PIV=1	RSVD	Association = 1		Identifier Type = 3			
18	Reserved = 0							
19	Identifier Length = 8							
20-27	(MSB) Target Port Identifier (World Wide ID) (LSB)							
28	Protocol Identifier = 6h				Code Set = 1			
29	PIV=1	RSVD	Association = 1		Identifier Type = 4			
30	Reserved = 0							
31	Identifier Length = 4							
32-35	(MSB) Relative Port Identifier (LSB)							
36	Protocol Identifier = 6h				Code Set = 1			
37	PIV=1	RSVD	Association = 2		Identifier Type = 3			
38	Reserved = 0							
39	Identifier Length = 8							
40-47	(MSB) Target Device Name Identifier (World Wide ID) (LSB)							

Table 83 Inquiry Data Format - EVPD = 1, (Page Code - 83h) (part 2 of 2)

Byte	Bit							
	7	6	5	4	3	2	1	0
48	Protocol Identifier = 0h				Code Set = 3			
49	PIV=0	RSVD	Association=2		Identifier Type = 8			
50	Reserved = 0							
51	Identifier Length =24 (18h)							
52-55	"naa" (ASCII)							
56-75	(MSB) Target Device Name Identifier (World Wide ID) in ASCII (LSB)							

- **Protocol Identifier** is valid only when PIV=1. Protocol Identifier = 0 indicates Fibre Channel devices. Protocol Identifier = 6 specifies SAS devices
- **Code Set** specifies the data type for the identifier field. Code Set = 1 indicates binary data, Code Set = 3 indicates ASCII.
- **PIV (Protocol Identifier Valid)** set to zero indicates that the Protocol Identifier field should be ignored. PIV set to one indicates that the Protocol Identifier field contains a valid value.
- **Association** specifies the entity with which the Identifier field is associated: 0h for LUN, 1h for Target or Relative Port, or 2h for Target Device.
- **Identifier Type** specifies the format and assignment authority for the identifier: 3h indicates NAA format of the WWID for LUN, Target Port and Target Device; 4h indicates Relative Port; 8h indicates SCSI name string.
- **Identifier** fields contain the actual Identifier Descriptor:
  - The LUN, Target Port and Target Device Name Identifiers are defined in the NAA IEE WWID format where:
  - Worldwide ID is a 64-bit unique identification for each drive. The format is:5000CCAh xxxh yyb n where:
    - **xxx** is the 12-bit block assignment defined for each model and manufacturing site
    - **n** is the 22-bit drive unique serial number
    - **yy** is the 2-bit port/node ID select
  - The **Relative Port Identifier** indicates the port which received the Inquiry command: 0000 0001h for the Primary Port, or 0000 0002h for the Secondary Port.

8.6.1.6 Inquiry Data Format - EVPD = 1, Page Code - 86h

Table 84 Inquiry Data Format - EVPD = 1, (Page Code - 86h)

Byte	Bit							
	7	6	5	4	3	2	1	0
0	Peripheral Qualifier			Peripheral Device Type				
1	Page Code = 86h							
2-3	(MSB)		Page Length (003Ch)				(LSB)	
4	Activate Microcode		SPT			GRD_CHK	APP_CHK	REF_CHK
5	Reserved		UASK_SUP	Group_Sup	Prior_Sup	HEADSUP	ORDSUP	SIMPSUP
6	Reserved				WU_SUP	CRD_SUP	NV_SUP	V_SUP
7	Reserved			P_I_I_SUP	Reserved			LUICLR
8	Reserved			R_SUP	Reserved			CBCS
9	Reserved				Multi I_T Nexus Microcode Download			
10-11	(MSB) Extended Self-Test Completion Minutes(LSB)							
12	POA_SUP	HRA_SUP	VSA_SUP	Reserved				
13	Maximum Supported Sense Data Length							
14-63	Reserved							

- **Activate Microcode** field is set to 01b to indicate that the drive
  1) activates the microcode before completion of the final command in the WRITE BUFFER sequence; and
  2) establishes a unit attention condition for the initiator port associated with every I_T nexus, except the I_T nexus on which the WRITE BUFFER command was received, with the additional sense code set to MICROCODE HAS BEEN CHANGED.
- **SPT** (Supported Protection Type) field is set to 001b to indicate that the drive supports type 1 and type 2 protection.
- **GRD_CHK (Guard Check)** is set to one to indicate that the drive checks the Logical Block Guard Tag field in the protection information, if any.
- **APP_CHK (Application Tag Check)** bit is set to one to indicate that the drive checks the Logical Block Application Tag field in the protection information, if any.
- **REF_CHK (Reference Tag Check)** bit is set to one to indicate that the drive checks the Logical Block Reference Tag field in the protection information, if any.
- **UASK_SUP (Unit Attention Condition Sense Key Specific Data Supported)** bit is set to zero to indicate that the drive does not return sense-key specific data for the UNIT ATTENTION sense key.
- **GROUP_SUP (Group Supported)** bit is set to zero to indicate that the grouping function is not supported.
- **PRIOR_SUP (Priority Supported)** bit is set to zero to indicate that task priority is not supported.
- **HEADSUP (Head of Queue Supported),** ORDSUP (Ordered Supported), and SIMPSUP (Simple Supported) are set to one to indicate support for Head of Queue, Ordered and Simple task attributes.
- **WU_SUP** is set to one as Write Long command is supported.
- **CRD_SUP** is set to one as Write Long command is supported.
- **NV_SUP (Non-volatile Supported)** is set to zero to indicate that non-volatile cache features are not supported.
- **V_SUP (Volatile Supported)** is set to one to indicate support of a volatile cache.
- **P_I_I_SUP (Protection Information Interval Supported)** bit is set to zero to indicate that the logical unit does not support protection information intervals.
- **R_SUP (Referrals Supported)** bit is set to zero to indicate that the drive does not support referrals.
- **POA_SUP (Power On Activation Supported)** bit is set to zero to indicate that the drive does not support a WRITE BUFFER command with the MODE field set to 0Dh and the PO_ACT bit set to one.

- **HRA_SUP (Hard Reset Activation Supported)** bit is set to zero to indicate that the drive does not support a WRITE BUFFER command with the MODE field set to 0Dh and the HR_ACT bit set to one.
- **VRA_SUP (Vendor Specific Activation Supported)** bit is set to zero to indicate that the drive does not support a WRITE BUFFER command with the MODE field set to 0Dh and the VSE_ACT bit set to one.
- **Maximum Supported Sense Data Length** field indicates the maximum length in bytes of sense data that the drive is capable of returning in the same I_T_L_Q nexus transaction as the status.

8.6.1.7 Inquiry Data Format - EVPD = 1, Page Code - 87h

Table 85 Inquiry Data Format - EVPD = 1, (Page Code - 87h)

Byte	Bit							
	7	6	5	4	3	2	1	0
0	Qualifier = 0			Peripheral Device Type = 0				
1	Page Code = 87h							
2-3	Page Length = 0004h							
4	Reserved=0		Policy Page Code = 3Fh					
5	Policy Subpage Code = FFh							
6	MILUS=1	Reserved = 0					Mode PagePolicy = 0	
7	Reserved = 0							

- **Policy Page Code** set to 3Fh and Policy Subpage Code set to FFh indicate that the descriptor applies to all mode pages and subpages
- **MILUS (Multiple Logical Units Share)** set to one indicates the policy is shared by multiple logical units.
- **Mode Page Policy** set to 00b indicates that all mode pages and subpages are shared.

8.6.1.8 Inquiry Data Format - EVPD = 1, Page Code - 88h

Table 86 Inquiry Data Format - EVPD = 1, (Page Code - 88h)

Byte	Bit							
	7	6	5	4	3	2	1	0
0	Qualifier = 0			Peripheral Device Type = 0				
1	Page Code = 88h							
2-3	Page Length = 48 (0030h)							
4-5	Reserved=0							
6-7	Primary Relative Port = 0001h							
8-9	Reserved = 0							
10-11	Initiator Port Transport ID Length = 0							
12-13	Reserved = 0							
14-15	Primary Target Port Descriptors Length = 0Ch							
16	Protocol Identifier				Code Set = 1			
17	PIV=1	RSVD	Association = 1		Identifier Type = 3			
18	Reserved = 0							
19	Identifier Length = 8							
20-27	(MSB) Primary Target Port Identifier (World Wide ID) (LSB)							
28-29	Reserved = 0							
30-31	Secondary Relative Port = 0002h							
32-33	Reserved = 0							
34-35	Initiator Port Transport ID Length = 0							
36-37	Reserved = 0							
38-39	Secondary Target Port Descriptors Length = 0Ch							
40	Protocol Identifier			Code Set = 1				
41	PIV=1	RSVD	Association = 1		Identifier Type = 3			
42	Reserved = 0							
43	Identifier Length = 8							
44-51	(MSB) Secondary Target Port Identifier (World Wide ID) (LSB)							

- **Protocol Identifier** is valid only when PIV=1.Protocol Identifier = 0 indicates Fibre Channel devices.Protocol Identifier = 6 indicates SAS devices
- **Code Set** specifies the data type for the identifier field. Code Set = 1 indicates binary data
- **PIV (Protocol Identifier Valid)** set to one indicates that the Protocol Identifier field contains a valid value.

- **Association** specifies the entity with which the Identifier field is associated: 1h for Target or Relative Port.
- **Identifier Type** specifies the format and assignment authority for the identifier: 3h indicates NAA format of the WWID for Target Port.
- **Identifier** fields contain the actual Identifier Descriptor.
  - The Target Port Identifiers are defined in the NAA IEE WWID format where:

    World Wide ID is a 64-bit unique identification for each drive. The format is: 5000CCAh

    xxxh n yyb where xxx is the 12-bit block assignment defined for each model and manufacturing site, n is the 22-bit drive unique serial number, and yy is the 2-bit port/node ID

8.6.1.9 Inquiry Data Format - EVPD = 1, Page Code - 8Ah

Table 87 Inquiry Data Format - EVPD = 1, (Page Code - 8Ah)

Byte	Bit							
	7	6	5	4	3	2	1	0
0	Qualifier = 0			Peripheral Device Type = 0				
1	Page Code = 8Ah							
2-3	Page Length = 14 (000Eh)							
4	Reserved=0						STANDBY_Y	STANDBY_Z
5	Reserved=0					IDLE_C	IDLE_B	IDLE_A
6-7	Stopped Condition Recovery Time							
8-9	Standby_Z Condition Recovery Time							
10-11	Standby_Y Condition Recovery Time							
12-13	Idle_A Condition Recovery Time							
14-15	Idle_B Condition Recovery Time							
16-17	Idle_C Condition Recovery Time							

- **Qualifier** field is set to zero to indicate that the LUN specified in the Command Block is currently supported.
- **Peripheral Device Type** is set to 0 to indicate that the device is Direct Access.
- **Page Code** is set to the value of the page code field in the CDB.
- **Page Length** is set to 14, and this field specifies the length of the following page data.
- If set to one, a power condition support bit **(STANDBY_Y, STANDBY_Z, IDLE_C, IDLE_B, IDLE_A**) indicates that the associated power condition is entered with START STOP UNIT command and the associated power condition is entered with a power condition timer if the timer is supported and enabled.
- **The recovery time fields** indicate the time, in one millisecond increments, that the logical unit takes to transition from the associated power condition to the active power condition. This time does not include the processing time for the command that caused this transition to occur. A value of zero indicates that the recovery time is not specified. A value of FFFFh indicates that the recovery time is more than 65.534 seconds.

8.6.1.10 Inquiry Data Format - EVPD = 1, Page Code - 8Dh

Table 88 Inquiry Data Format - EVPD = 1, (Page Code - 8Dh)

Byte	Bit							
	7	6	5	4	3	2	1	0
0	Qualifier = 0			Peripheral Device Type = 0				
1	Page Code = 8Dh							
2-3	Page Length = 4							
4	Power Consumption Identifier (=0)							
5	Reserved=0					Power Consumption Units (=4)		
6-7	Power Consumption Value							

- **Qualifier** field is set to zero to indicate that the LUN specified in the Command Block is currently supported.
- **Peripheral Device Type** is set to 0 to indicate that the device is Direct Access. .
- **Page Code** is set to the value of the page code field in the CDB.
- **Page Length** is set to 4, and this field specifies the length of the following page data.
- **The Power Consumption Identifier** is set to 0.
- **The Power Consumption Units** is set to 4, and this field indicates the units used for the POWER CONSUMPTION VALUE field. 4 = Milliwatts
- **The Power Consumption Value** field indicate the maximum power consumption.

8.6.1.11 Inquiry Data Format - EVPD = 1, Page Code - 90h

Table 89 Inquiry Data - EVPD = 1 (Page Code = 90h)

Byte	Bit							
	7	6	5	4	3	2	1	0
0	Qualifier = 0			Peripheral Device = 0				
1	Page Code = 90h							
2-3	Page Length = 24 (0018h)							
4-15	Protocol-specific logical unit information descriptor 0.							
16-27	Protocol-specific logical unit information descriptor 1.							

- **Qualifier** field is set to zero to indicate that the LUN specified in the Command Block is currently supported.
- **Peripheral Device Type** is set to 0 to indicate that the device is Direct Access.
- **Page Code** is set to the value of the page code field in the CDB.
- **Page Length** is set to 24, and this field specifies the length of the following page data.
- **Protocol-specific logical unit information descriptor 0** field is defined in Table 90.
- **Protocol-specific logical unit information descriptor 1** field is defined in Table 90.

Table 90 Protocol-specific logical unit information descriptor

Byte	Bit							
	7	6	5	4	3	2	1	0
0-1	Relative Port Identifier							
2	Reserved				Protocol Identifier = 6h			
3-5	Reserved							
6-7	Descriptor Length (0004h)							
8	Reserved							TLR CONTROL SUPPORTED = 0h
9-11	Reserved							

- **Relative Port Identifier** is set to 1 for Port A (Primary Port) or 2 for Port B (Secondary Port).
- **Protocol Identifier** is set to 6 to specify that this is a SAS SSP Descriptor.
- **TLR Control Supported** field specifies support of the TLR CONTROL field in the SAS SSP frame header. This field is set to zero to indicate that the drive does not support Transport Layer Retries

8.6.1.12 Inquiry Data Format - EVPD = 1, Page Code - 91h

Table 91 Protocol Specific Port Information VPD page to SAS SSP

Byte	Bit							
	7	6	5	4	3	2	1	0
0	Qualifier = 0			Peripheral Device Type = 0				
1	Page Code = 91h							
2-3	Page Length = 24 (0018h)							
4-15	Port Information Descriptor 0							
16-27	Port Information Descriptor 1							

- **Qualifier** is set to 0 to indicate that the LUN specified in the Command Block is currently supported.
- **Peripheral Device Type** is set to 0 to indicate that the device is Direct Access.
- **Page Code** is set to the value of the page code field in the CDB.
- **Page Length** is set to 24, and this field specifies the length of the following page data.

  Port Information Descriptor 0 is defined in Table 92.

  Port Information Descriptor 1 is defined in Table 92.

Table 92 Port Information Descriptor for SAS SSP

Byte	Bit							
	7	6	5	4	3	2	1	0
0-1	Relative Port Identifier							
2	Reserved				Protocol Identifier (6h)			
3	Reserved							PWR_D_S
4-5	Reserved							
6-7	Descriptor Length (0004h)							
8-11	SAS PHY Information Descriptor 0							

- **Relative Port Identifier** is set to 1 for Port A (Primary Port) or 2 for Port B (Secondary Port).
- **Protocol Identifier** is set to 6 to specify that this is a SAS SSP Descriptor.
- **PWR_D_S,** Power Disable Supported, is set to 1 to specify that the POWER DISABLE signal is supported.
- **SAS PHY Information Descriptor 0** is defined in Table 93.

Table 93 SAS PHY Information Descriptor for SAS SSP

Byte	Bit							
	7	6	5	4	3	2	1	0
0	Reserved							
1	PHY Identifier							
2	Reserved							
3	Reserved							SSP Persistent Capable
4	Reserved							

- **PHY Identifier** is set to 0 for Port A (Primary Port) or 1 for Port B (Secondary Port).
- **SSP Persistent Capable** is set to 0 indicates that the PHY does not support persistent connections

8.6.1.13 Inquiry Data Format - EVPD = 1, Page Code - B0h

Table 94 Inquiry Data - EVPD = 1 (Page Code = B0h)

Byte	Bit							
	7	6	5	4	3	2	1	0
0	Qualifier = 0			Peripheral Device Type = 0				
1	Page Code = B0h							
2-3	Page Length = 60 (003Ch)							
4	Reserved							WSNZ=0
5	Maximum Compare and Write Length = 0							
6-7	Optimal Transfer Length Granularity = 0							
8-11	Maximum Transfer Length = 0							
12-15	Optimal Transfer Length = 0							
16-19	Maximum Prefetch XDRead XDWrite Transfer Length = 0							
20-23	Maximum Unmap LBA Count = 0							
24-27	Maximum Unmap Block Descriptor Count = 0							
28-31	Optimal Unmap Granularity = 0							
32-35	UGAVALID=0	Unmap Granularity Alignment = 0						
36-43	Maximum Write Same Length = 0							
44-63	Reserved							

- **Qualifier**: set to zero to indicate that the LUN specified in the Command Block is currently supported.
- **Peripheral Device Type** is set to 0 to indicate that the device is Direct Access.
- **Page Code:** set to the value of the page code field in the CDB.
- **Page Length:** This field is set to 60 (3Ch), and specifies the length of the following page data.
- **WSNZ - Write Same No Zero:** set to zero which indicates the drive supports a value of zero in the NUMBER OF LOGICAL BLOCKS field in the WRITE SAME command CDB.
- **Maximum Compare and Write Length:** set to zero which indicates the drive does not support the COMPARE AND WRITE command.
- **Optimal Transfer Length Granularity:** set to zero to indicate that the drive does not report optimal transfer length granularity.
- **Maximum Transfer Length:** set to zero which indicates there is no reported limit on the maximum transfer length in logical blocks that the drive accepts for a single request using any of the following supported media access commands: PREFETCH, READ, VERIFY, WRITE, WRITE AND VERIFY.
- **Optimal Transfer Length:** set to zero which indicates there is no reported value for the optimal transfer length in logical blocks for any of the following supported media access commands: PREFETCH, READ, VERIFY, WRITE, WRITE AND VERIFY.
- **Maximum Prefetch XDRead XDWrite Transfer Length:** indicates the maximum transfer length in logical blocks that the drive accepts for a single PRE-FETCH command. It is set to zero to be less than or equal to the Maximum Transfer Length (above).
- **Maximum Unmap LBA Count:** set to 0000_0000h to indicate that the drive does not implement the UNMAP command.
- **Maximum Unmap Block Descriptor Count:** set to 0000_0000h to indicate that the drive does not implement the UNMAP command.

- **Optimal Unmap Granularity:** set to 0000_0000h to indicate that the optimal unmap granularity is not specified.
- **UGAVALID - Unmap Granularity Alignment VALID:** set to 0 indicates that the UNMAP GRANULARITY ALIGNMENT field is not valid.
- **Unmap Granularity Alignment:** set to zero and is not valid.
- **Maximum Write Same Length:** set to zero which indicates that there is no reported limit on the number of logical blocks that are requested for a single WRITE SAME command.

8.6.1.14 Inquiry Data Format - EVPD = 1, Page Code - B1h

Table 95 Inquiry Data - EVPD = 1 (Page Code = B1h)

Byte	Bit							
	7	6	5	4	3	2	1	0
0	Qualifier = 0			Peripheral Device Type = 0				
1	Page Code = B1h							
2-3	Page Length = 60 (003Ch)							
4-5	Medium Rotation Rate 7200 (1C20h)							
6	Reserved							
7	Reserved		WACEREQ		Nominal Form Factor = 2h			
8-63	Reserved							

- **Qualifier** field is set to zero to indicate that the LUN specified in the Command Block is currently supported.
- **Peripheral Device Type** is set to 0 to indicate that the device is Direct Access.
- **Page Code** is set to the value of the page code field in the CDB.
- **Page Length** is set to 60, and this field specifies the length of the following page data.
- **Medium Rotation Rate** field is set to 7200.
- **WACEREQ** is set to 01b when Cryptographic Erase is supported, otherwise it is set to 00b.
- **Nominal Form Factor** field is set to 2h.

8.6.1.15 Inquiry Data Format - EVPD = 1, Page Code - B2h

Table 96 Inquiry Data - EVPD = 1 (Page Code = B2h)

Byte	Bit							
	7	6	5	4	3	2	1	0
0	Qualifier = 0			Peripheral Device Type = 0				
1	Page Code = B2h							
2-3	Page Length = 4 (0004h)							
4	Threshold Exponent = 0							
5	LBPU=0	LBPWS= 0	LBPWS10=0	Reserved		LBPRZ=0	ANC_SUP=0	DP=0
6	Reserved					Provisioning Type = 0		
7	Reserved							

- **Threshold Exponent:** set to zero which indicates that the logical unit does not support logical block provisioning thresholds
- **LBPU:** set to 0 to indicate that the device does not support the UNMAP command.
- **LBPWS:** set to 0 to indicate that the device does not support the WRITE SAME (16) command to unmap LBAs.
- **LBPWS10:** set to 0 to indicate that the device does not support the WRITE SAME (10) command to unmap LBAs.
- **LBPRZ:** set to 0 to indicate that, for an unmapped LBA specified by a read operation, the drive sends user data with all bits set to any value to the Data-In Buffer
- **ANC_SUP:** set to 0 to indicate that the device does not support anchored LBAs.
- **DP:** set to 0 to indicate no Provisioning Group Descriptor is present
- **Provisioning Type**: set to 0 to indicate the logical unit is fully provisioned

8.6.1.16 Inquiry Data Format - EVPD = 1, Page Code – D1h

Table 97 Inquiry Data - EVPD = 1 (Page Code = D1h)

Byte	Bit							
	7	6	5	4	3	2	1	0
0	Qualifier = 0			Peripheral Device Type = 0				
1	Page Code = D1h							
2	Reserved = 0							
3	Page Length = 80 (50h)							
4-19	ASCII Media Disk Definition							
20-35	ASCII Motor Serial Number							
36-51	ASCII Flex Assembly Serial Number							
52-67	ASCII Actuator Serial Number							
68-83	ASCII Device Enclosure Serial Number							

- **Qualifier** is set to zero to indicate that the LUN specified in the Command Block is currently supported.
- **Peripheral Device Type** is set to 0 to indicate that the device is Direct Access.
- **Page Code** is set to the value of the page code field in the CDB.
- **Page Length** is set to 80, and this field specifies the length of the following page data.

Note: If the media is not available, bytes 0 through 3 are valid. All the other fields are ASCII blanks (20h).

Note: All ASCII fields are alphanumeric, left aligned, and padded on the right with ASCII blanks (20h).

8.6.1.17 Inquiry Data Format - EVPD = 1, Page Code - D2h

Table 98 Inquiry Data - EVPD = 1 (Page Code = D2h)

Byte	Bit							
	7	6	5	4	3	2	1	0
0	Qualifier = 0			Peripheral Device Type = 0				
1	Page Code = D2h							
2	Reserved = 0							
3	Page Length = 52 (34h)							
4	HDC Version Length = 16 (10h)							
5 - 20	ASCII HDC Version							
21	Card Serial Number Length = 16 (10h)							
22 – 37	ASCII Card Serial Number							
38	Card Assembly Part Number Length = 16 (10h)							
39 – 54	ASCII Card Assembly Part Number							
55	Reserved = 0							

- **Qualifier** is set to zero to indicate that the LUN specified in the Command Block is currently supported.
- **Peripheral Device Type** is set to 0 to indicate that the device is Direct Access.
- **Page Code** is set to the value of the page code field in the CDB.
- **Page Length** is set to 52, and this field specifies the length of the following page data.

Note: If the media is not available, bytes 0 through 3 are valid. All the other fields are ASCII blanks (20h).

Note: All ASCII fields are alphanumeric, left aligned, and padded on the right with ASCII blanks (20h).

8.7 LOG SELECT (4C)

Table 99 Log Select (4C)

Byte	Bit							
	7	6	5	4	3	2	1	0
0	Command Code = 4Ch							
1	Reserved = 0			Reserved = 0			PCR	SP
2	PC		Page Code					
3	SubPage Code = 0							
4-6	Reserved = 0							
7-8	(MSB) Parameter List Length = 0 (LSB)							
9	Reserved = 0						FLAG	LINK

The LOG SELECT command provides a means for the Initiator to clear statistical information maintained by the drive and reported via the LOG SENSE command.

- **PCR** The Parameter Code Reset determines whether the Log Sense parameters will be cleared and unit attention posted for all other Initiators. A value of 1 indicates that the parameters be cleared, while a value of zero (except when PC = 11b) indicates that the parameters not be cleared. Parameter list length must be zero when PCR is 1.The PC field is ignored for list parameters, i.e. when the Format and Linking (F&L) field contains 01b or 11b.
- **SP** The Save Parameters bit value of zero indicates that the page parameters not be saved. A value of 1 indicates that the page parameters that are savable be saved after they have been changed. SP bit MUST be 1 if parameter list length is greater than zero. Otherwise it will result in a *Check Condition* status being returned. The sense key shall be set to *Illegal Request* and additional sense code of *Invalid Field in CDB*.
- **PC** The Page Control field defines the type of parameters to be selected. The PC field set to 11b (and PCR is then a don't care) indicates that the Default Cumulative values are set to their default values of 0. If the PC field is set to 01b and PCR is set to 1, the Current Cumulative values are also set to their default values of 0.

  Parameter List Length MUST be zero when PC = 11b. Otherwise the command is terminated and a *Check Condition* status is returned. The sense key shall be set to *Illegal Request* and additional sense code of *Invalid Field in CDB*.
- **Page Code** field identifies which page is being selected. This field must be set to the values indicated in Page 0. If the Page Code value is invalid a Check Condition status is returned with a sense key of Illegal Request and additional sense code of Invalid Field in CDB.
  - If page code field is set to zero, then the selection applies to all log parameters in all valid log pages.
  - If page code field is set to a non zero, then the selection applies to all log parameters specified by this field.
- **SubPage Code** This field specifies the subpage to select.
- **Parameter List Length** The Parameter List Length field specifies the length in bytes of the parameter list that shall be located in the DATA OUT buffer. A parameter list length zero indicates that no pages shall be transferred.
  - If the PARAMETER LIST LENGTH field is set to zero, then the PCR bit, the SP bit, and the PC fields apply to the page (pages) addressed by the page code field.
  - If The PARAMETER LIST LENGTH field is set to non zero, and the if PAGE CODE field is non-zero or the SUBPAGE CODE field is non-zero, then the command shall be terminated with CHECK CONDITION status, with the sense key set to ILLEGAL REQUEST, and the additional sense code set to INVALID FIELD IN CDB.

Note: A specified length greater than 0x00FF will result in a Check Condition status being returned. A length that results in log data being truncated will generate a Check Condition status.

Note: For page 0Fh, the maximum parameter list length supported is 4004h (4 bytes for the header and 100h bytes for each of the 40h parameters that are supported). The Parameter List Length must be an integral of the number of parameters plus the 4 byte header. (Ex: Parameter length =104h for one parameter, 204h for 2 parameters,... 4004h for all 40h parameters).

The drive allows updates to the current cumulative values only. A value of zero is acceptable and is not considered an error.
The drive updates only pages 0Eh, the Start/Stop Cycle page and 0Fh, the Application Client page. For other pages the parameters are ignored. If the data out buffer contains multiple pages then the application client should send the pages in ascending order. If the data out buffer contains multiple log parameters within a page, all log parameters within the page should be sent and they should be sent in ascending order by parameter code value. The drive shall return Check Condition status if the application client sends pages out of order, parameter codes out of order or missing parameter code. The sense key shall be set to Illegal Request and additional sense code set to Invalid Field in Parameter List. If one or more fields of the CDB are not set correctly the command will be terminated with a *Check Condition* status. The sense key shall be set to *Illegal Request* and additional sense code of *Invalid Field in CDB*. To indicate that parameters have changed, the Target generates a unit attention condition for all Initiators except the one that issued the LOG SELECT command.

The following list contains all individual page parameters (counters) that are set to their default value of zero by the LOG SELECT command (when PCR=1).

- Page **02h** parameters: (Counters for write errors)
  - Write errors recovered without delay
  - Write errors recovered with possible delays
  - LBAs with write fault error
  - Reserved=0
  - Total errors recovered
  - Number of times recovery invoked
  - Total write byte count
  - LBAs with hard error
- Page **03h** parameters: (Counters for read errors)
  - Read errors recovered without delay
  - Read errors recovered with possible delays
  - LBAs with LDPC detected error
  - Reserved=0
  - Total errors recovered
  - Number of times recovery invoked
  - Total read byte count
  - LBAs with hard error
- Page **05h** parameters: (Counters for Verify Errors)
  - Errors recovered without delay
  - Errors recovered with possible delays
  - LBAs with LDPC detected error
  - Reserved=0
  - Total errors recovered
  - Number of times recovery invoked
  - Total bytes verified
  - LBAs with hard error

- Page **06h** parameters: (Counters for non medium errors, seek and other hardware type failures)
  - Non-Medium Error Counter
- Page **15h** parameters: (Background Medium Scan information)
  - BMS Status parameter
  - all Medium Scan parameters
- Page **18h** parameters (SAS PHY Error counts - only cleared for the port which receives the Log Select)
  - Invalid DWORD Count
  - Running Disparity Error Count
  - Loss of DWORD Synchronization Count
  - PHY Reset Problem Count
- Page **30h** parameters:
  - Zero Seeks counter
  - Seeks > = to 2/3 counter
  - Seeks > = 1/3 and < 2/3 counter
  - Seeks > = 1/6 and < 1/3 counter
  - Seeks > = 1/12 and < 1/6 counter
  - Seeks > 0 and < 1/12 counter
  - Overrun Counter
  - Under run Counter
  - Device Cache Full Read Hits
  - Device Cache Partial Read Hits
  - Device Cache Write Hits
  - Device Cache Fast Writes
  - Device Cache Misses on Reads
- Page **37h** parameters:
  - Media EXC
  - Hardware EXC
  - Total Read Commands
  - Total Write Commands

8.8 LOG SENSE (4D)

Table 100 Log Sense (4D)

Byte	Bit							
	7	6	5	4	3	2	1	0
0	Command Code = 4Dh							
1	Reserved = 0			Reserved = 0			PPC=0	SP
2	PC		Page Code					
3	Subpage Code							
4	Reserved							
5-6	(MSB) Parameter Pointer (LSB)							
7-8	(MSB) Allocation Length (LSB)							
9	Reserved = 0						FLAG	LINK

The LOG SENSE command allows the Initiator to retrieve the statistical data regarding the drive.

- **PPC** (Parameter Pointer Control) bit must be set to zero. This specifies that the drive start transferring data starting from the field specified in the parameter pointer field for the number of bytes specified by the allocation length. If the PPC bit is set to 1, *Check Condition* status is returned with a sense key of *Illegal Request* and additional sense code of *Invalid Field in CDB*.
- **SP** (Save Parameters) bit set to 0 specifies that the drive does not save any log parameters. If it is set to 1, all page parameters that are savable (those pages denoted by a DS = 0 in the parameter header control byte) are saved.
- **PC** (Page Control) field defines the type of parameters to be selected. This field must be set to 01b to specify the current cumulative values. Any other value in this field will cause the command to end with a *Check Condition* status with a sense key of *Illegal Request* and an additional sense code of *Invalid Field in CDB*.
- **Page Code** field identifies which page is being requested. This field must be set to the values indicated in Page 0. If the Page Code value is invalid a *Check Condition* status is returned with a sense key of *Illegal Request* and additional sense code of *Invalid Field in CDB*.

This field is ignored if the log page parameters are either ASCII list format or Binary list format.

- **SubPage Code** This field specifies the subpage to select.
- **Parameter Pointer** field specifies the beginning parameter code for the data transfer.
- **Allocation Length** field specifies the maximum number of bytes the Initiator has allocated for returned Log Sense Data. No bytes are transferred if the length is zero. This condition is not considered an error. The Target terminates the Data in phase when all available Log Sense data has been transferred or when the number of bytes equals the allocation length, whichever is less.

8.8.1 Log Page parameters

Each log page begins with a 4-byte page header followed by zero or more variable-length log parameters.

Page header

Page Code field identifies which log page is being transferred.

The Page Length field specifies the length in bytes of the following log parameters.

Log parameters

Each log parameter begins with a 4-byte parameter header followed by one or more bytes of parameter value data.

The Parameter Code field identifies which log parameter is being transferred for that log page.
The Parameter Control field, the 3rd byte of each parameter header, contains several fields.

- **DU** The Disable Update bit is set to 0 to indicate that the drive updates the log parameter value to reflect events that should be noted by that parameter.
- **TSD** The Target Save Disable bit is set to zero to indicate that the drive provides a Target defined method for saving log parameters.
- **ETC** The enable Threshold Comparison bit is set to 0 to indicate the drive does not perform comparisons between cumulative and any threshold values.
- **TMC** The Threshold Met Criteria field is not valid because this drive does not perform threshold comparisons. This field is set to 0.
- **Format and Linking** The F & L field indicates the type of log parameter and how parameters that reach their maximum value are handled.
  - 00b: Data counter: If any other parameter in this log page reaches its maximum value, then this parameter shall stop incrementing until reinitialized by a Log Select command.
  - 01b: List format ASCII data: No maximum values to handle
  - 10b: Data counter: If another parameter reported in this log page reaches its maximum value, then this parameter does not stop incrementing. This parameter is reinitialized by a Log Select command.
  - 11b: List format binary data: No maximum values to handle.

8.8.2 Log Sense Page 0

Page 0 indicates the supported log sense pages. This page is used to determine which additional pages and Initiator can request.

Table 101 Log Sense Page 0

Byte	Bit							
	7	6	5	4	3	2	1	0
0	Reserved		Page code = 0					
1	Reserved							
2-3	Page Length = 0011h (Number of Pages Supported)							
4	First supported page 00h							
5	Second supported page 02h							
6	Third supported page 03h							
7	Fourth supported page 05h							
8	Fifth supported page 06h							
9	Sixth supported page 08h							
10	Seventh supported page 0Dh							
11	Eighth supported page 0Eh							
12	Ninth supported page 0Fh							
13	Tenth supported page 10h							
14	Eleventh supported page 15h							
15	Twelfth supported page 18h							
16	Thirteenth supported page 19h							
17	Fourteenth supported Page 1Ah							
18	Fifteenth supported Page 2Fh							
19	Sixteenth supported Page 30h							
20	Seventeenth supported Page 37h							

8.8.3 Log Sense Page 2

This page contains counters for write errors.

Table 102 Log Sense Page 2

Byte	Bit							
	7	6	5	4	3	2	1	0
0	Reserved		Page code = 02h					
1	Reserved							
2-3	Page Length = 54h							
4-5	Parameter Code = 0000h							
6	DU=0	DS=0	TSD=0	ETC=0	TMC=0		F&L=00b	
7	Parameter Length = 08h							
8-15	Reserved = 0							
16-17	ParameterCode = 0001h							
18	DU=0	DS=0	TSD=0	ETC=0	TMC=0		F&L=00b	
19	Parameter Length = 08h							
20-27	Errors recovered with possible delays							
28-29	Parameter Code = 0002h							
30	DU=0	DS=0	TSD=0	ETC=0	TMC=0		F&L=00b	
31	Parameter Length = 08h							
32-39	Reserved = 0							
40-41	Parameter Code = 0003h							
42	DU=0	DS=0	TSD=0	ETC=0	TMC=0		F&L=00b	
43	Parameter Length = 08h							
44-51	Total errors recovered							
52-53	Parameter Code = 0004h							
54	DU=0	DS=0	TSD=0	ETC=0	TMC=0		F&L=00b	
55	Parameter Length = 08h							
56-63	Times recovery invoked							
64-65	Parameter Code = 0005h							
66	DU=0	DS=0	TSD=0	ETC=0	TMC=0		F&L=00b	
67	Parameter Length = 08h							
68-75	Total bytes written							
76-77	Parameter Code = 0006h							
78	DU=0	DS=0	TSD=0	ETC=0	TMC=0		F&L=00b	
79	Parameter Length = 08h							
80-87	Count of hard errors							

All parameter counts indicate the number of sectors with the specified types of errors, except Times Recovery Invoked, which is a cumulative count of all recovery steps attempted on all sectors written.

8.8.4 Log Sense Page 3

This page contains counters for read errors.

Table 103 Log Sense Page 3

Byte	Bit							
	7	6	5	4	3	2	1	0
0	Reserved		Page code = 03h					
1	Reserved							
2-3	Page Length = 54h							
4-5	Parameter Code = 0000h							
6	DU=0	DS=0	TSD=0	ETC=0	TMC=0		F&L=00b	
7	Parameter Length = 08h							
8-15	Reserved = 0							
16-17	Parameter Code = 0001h							
18	DU=0	DS=0	TSD=0	ETC=0	TMC=0		F&L=00b	
19	Parameter Length = 08h							
20-27	Errors recovered with possible delays							
28-29	Parameter Code = 0002h							
30	DU=0	DS=0	TSD=0	ETC=0	TMC=0		F&L=00b	
31	Parameter Length = 08h							
32-39	Reserved = 0							
40-41	Parameter Code = 0003h							
42	DU=0	DS=0	TSD=0	ETC=0	TMC=0		F&L=00b	
43	Parameter Length = 08h							
44-51	Total errors recovered							
52-53	Parameter Code = 0004h							
54	DU=0	DS=0	TSD=0	ETC=0	TMC=0		F&L=00b	
55	Parameter Length = 08h							
56-63	Times recovery invoked							
64-65	Parameter Code = 0005h							
66	DU=0	DS=0	TSD=0	ETC=0	TMC=0		F&L=00b	
67	Parameter Length = 08h							
68-75	Total bytes read							
76-77	Parameter Code = 0006h							
78	DU=0	DS=0	TSD=0	ETC=0	TMC=0		F&L=00b	
79	Parameter Length = 08h							
80-87	Count of hard errors							

All parameter counts indicate the number of sectors with the specified types of errors, except Times Recovery Invoked, which is a cumulative count of all recovery steps attempted on all sectors read. LDPC-on-the-fly correction is not included in any counters.

8.8.5 Log Sense Page 5

This page contains counters for verify errors.

Table 104 Log Sense Page 5

Byte	Bit							
	7	6	5	4	3	2	1	0
0	Reserved		Page code = 05h					
1	Reserved							
2-3	Page Length = 54h							
4-5	Parameter Code = 0000h							
6	DU=0	DS=0	TSD=0	ETC=0	TMC=0		F&L=00b	
7	Parameter Length = 08h							
8-15	Reserved = 0							
16-17	Parameter Code = 0001h							
18	DU=0	DS=0	TSD=0	ETC=0	TMC=0		F&L=00b	
19	Parameter Length = 08h							
20-27	Errors recovered with possible delays							
28-29	Parameter Code = 0002h							
30	DU=0	DS=0	TSD=0	ETC=0	TMC=0		F&L=00b	
31	Parameter Length = 08h							
32-39	Reserved = 0							
40-41	Parameter Code = 0003h							
42	DU=0	DS=0	TSD=0	ETC=0	TMC=0		F&L=00b	
43	Parameter Length = 08h							
44-51	Total errors recovered							
52-53	Parameter Code = 0004h							
54	DU=0	DS=0	TSD=0	ETC=0	TMC=0		F&L=00b	
55	Parameter Length = 08h							
56-63	Times recovery invoked							
64-65	Parameter Code = 0005h							
66	DU=0	DS=0	TSD=0	ETC=0	TMC=0		F&L=00b	
67	Parameter Length = 08h							
68-75	Total Bytes Verified							
76-77	Parameter Code = 0006h							
78	DU=0	DS=0	TSD=0	ETC=0	TMC=0		F&L=00b	
79	Parameter Length = 08h							
80-87	Count of hard errors							

All parameter counts indicate the number of sectors with the specified types of errors, except Times Recovery Invoked, which is a cumulative count of all recovery steps attempted on all sectors verified. LDPC-on-the-fly correction is not included in any counters.

8.8.6 Log Sense Page 6

This page contains counters for non-medium errors. This includes seek errors and other hardware type failures.

Table 105 Log Sense Page 6

Byte	Bit							
	7	6	5	4	3	2	1	0
0	Reserved		Page code = 06h					
1	Reserved							
2-3	Page Length = 0Ch							
4-5	Parameter Code = 00h							
6	DU=0	DS=0	TSD=0	ETC=0	TMC=0		F&L=00b	
7	Parameter Length = 08h							
8-15	Error count							

8.8.7 Log Sense Page 8

This page contains format status. It reports information about the most recent successful format operation and the state of the direct access block device since that operation was performed.

Table 106 Log Sense Page 8

Byte	Bit							
	7	6	5	4	3	2	1	0
0	Reserved		Page code = 08h					
1	Reserved							
2-3	Page Length = 54h							
4-5	Parameter Code = 0000h							
6	DU=0	DS=0	TSD=0	ETC=0	TMC=0		F&L=00b	
7	Parameter Length = 08h							
8	Protection field Usage							
9	Format Options							
10-11	Defect list length							
12-13	Parameter Code = 0000h							
14	DU=0	DS=0	TSD=0	ETC=0	TMC=0		F&L=00b	
15	Parameter Length = 0Ch							
16-23	Format Data Output Values							
24-25	Parameter Code = 0001h							
26	DU=0	DS=0	TSD=0	ETC=0	TMC=0		F&L=00b	
27	Parameter Length = 0Ch							
28-35	Grown Defects during certification							
36-37	Parameter Code = 0002h							
38	DU=0	DS=0	TSD=0	ETC=0	TMC=0		F&L=00b	
39	Parameter Length = 0Ch							
40-47	Total blocks reassigned during format							
48-49	Parameter Code = 0003h							
50	DU=0	DS=0	TSD=0	ETC=0	TMC=0		F&L=00b	
51	Parameter Length = 0Ch							
52-59	Total new blocks reassigned							
64-65	Parameter Code = 0004h							
66	DU=0	DS=0	TSD=0	ETC=0	TMC=0		F&L=00b	
67	Parameter Length = 08h							
68-71	Power on minutes since format							

8.8.8 Log Sense Page D

This page contains temperature information.

Table 107 Log Sense Page D

Byte	Bit							
	7	6	5	4	3	2	1	0
0	Reserved		Page code = 0Dh					
1	Reserved							
2-3	Page Length = 0Ch							
4-5	Parameter Code = 0000h							
6	DU=0	DS=1	TSD=0	ETC=0	TMC=0		F&L=11b	
7	Parameter Length = 02h							
8	Reserved							
9	Temperature (degrees Celsius)							
10-11	Parameter Code 0001h							
12	DU=0	DS=1	TSD=0	ETC=0	TMC=0		F&L=11b	
13	Parameter Length = 02h							
14	Reserved							
15	Reference Temperature (degrees Celsius)							

8.8.9 Log Sense Page E

This page contains the start-stop cycle information.

Table 108 Log Sense Page E

Byte	Bit							
	7	6	5	4	3	2	1	0
0	Reserved		Page code = 0Eh					
1	Reserved							
2-3	Page Length = 34h							
4-5	Parameter Code = 0001h							
6	DU=0	DS=1	TSD=0	ETC=0	TMC=0		F&L=00b	
7	Parameter Length = 06h							
8-11	Year of Manufacture (4 ASCII characters)							
12-13	Week of Manufacture (2 ASCII characters)							
14-15	Parameter Code 0002h							
16	DU=0	DS=0	TSD=0	ETC=0	TMC = 0		F&L = 00b	
17	Parameter Length = 06h							
18-21	Accounting Date Year (4 ASCII characters)							
22-23	Accounting Date Week (2 ASCII characters)							
24-25	Parameter Code 0003h							
26	DU=0	DS=1	TSD=0	ETC=0	TMC = 0		F&L = 00b	
27	Parameter Length = 04h							
28-31	Specified cycle count over device lifetime							
32-33	Parameter Code 0004h							
34	DU=0	DS=1	TSD=0	ETC=0	TMC = 0		F&L = 00b	
35	Parameter Length = 04h							
36-39	Accumulated start-stop cycles (4 byte binary number)							
40-41	Parameter Code 0005h							
42	DU=0	DS=1	TSD=0	ETC=0	TMC = 0		F&L = 00b	
43	Parameter Length = 04h							
44-47	Specified load unload count over device lifetime							
48-49	Parameter Code 0006h							
50	DU=0	DS=1	TSD=0	ETC=0	TMC = 0		F&L = 00b	
51	Parameter Length = 04h							
52-55	Accumulated load unload cycles (4 byte binary number)							

The week and year that the device was manufactured shall be set in the parameter field defined by parameter code 0001h. The date of manufacture cannot be saved using the LOG SELECT command. The data is expected in numeric ASCII characters (30-39h) in the form YYYYWW. The accounting date specified by parameter code 0002h is a parameter that can be saved using the LOG SELECT command.

8.8.10 Log Sense Page F

This page contains the Application Client Log.

Table 109 Log Sense Page F

Byte	Bit							
	7	6	5	4	3	2	1	0
0	Reserved		Page code = 0Fh					
1	Reserved							
2-3	Page length = 4000h							
Application client log parameter								
4-259	1st application client log parameter							

The following table describes the application client log parameter structure.

Table 110 Log Sense Page F, Application Client Log

Byte	Bit							
	7	6	5	4	3	2	1	0
0-1	Parameter code							
2	DU=1	DS=0	TSD=0	ETC=0	TMC=0		F&L=00b	
3	Parameter length = FCh							
4-	First parameter byte							
255	Last parameter byte							

Parameter code 0000h through 003Fh are supported.
The values stored in the parameter bytes represent data sent to the device in a previous LOG SELECT command.

8.8.11 Log Sense Page 10

This page contains self-test results. The results of the 20 most recent self-tests are stored in this Log page.

Table 111 Log Sense Page 10

Byte	Bit							
	7	6	5	4	3	2	1	0
0	Reserved		Page code = 10h					
1	Reserved							
2-3	Page Length = 190h							
4-23	1st self-test results log parameter							
384- 403	20th self-test results log parameter							

The following table describes the self-test results log parameter structure

Table 112 Log Sense Page 10 parameter sructure

Byte	Bit							
	7	6	5	4	3	2	1	0
0-1	Parameter code							
2	DU=0	DS=0	TSD=0	ETC=0	TMC=0		F&L=11b	
3	Parameter Length = 10h							
4	Function Code			RSVD	Self-Test Results Value			
5	Extended Segment Number							
6-7	Timestamp							
8-15	LBA of First Failure							
16	Reserved				Sense Key			
17	Additional Sense Code							
18	Additional Sense Code Qualifier							
19	Vendor specific							

- **Parameter Code** identifies the log parameter for the log page. The parameter code field for the results of the most recent test will be 0001h. The parameter for the next most recent will be 0002h.
- **Function Code** contains the content of the Function Code field in the SEND DIAGNOSTIC command that initiated this self-test.
- **Self-Test Results Value** is described in the table below.

Table 113 Log Sense Page 10, self-test results

Value	Description
0h	The self-test routine completed without error.
1h	The background self-test routine was aborted by the initiator using a SEND DIAGNOSTIC command with the Abort Background self-test function.
2h	The self-test routine was aborted by the application client by a Task Management function or a reset.
3h	An unknown error occurred while the Target was executing the self-test routine and the Target was unable to complete the self-test routine.
4h	The self-test completed with a test element that failed and it is not known which test element failed.
5h	The first segment of the self-test failed.
6h	The second segment of the self-test failed.
7h	The third or greater segment of the self-test failed (see the Extended segment number field).
8h-Eh	Reserved.
Fh	The self-test is in progress.

- **Extended Segment Number** This field identifies the number of the segment that failed during self-test. If no segment failed, this field will be 00h.

Table 114 Log Sense Page 10, Extended Segment Number

Extended Segment Number	Short Self-Test	Extended Self-Test
1h	Drive Ready Test	
2h	Drive Diagnostics	
3h	SMART	
4h	Low Level Format check	
5h	Physical Head Check	
6h	Random Verify	
7h	- Verify First 300 MB - Verify Last 100 MB	Verify all LBAs
8h	Recheck SMART	

- **Timestamp** This field contains the total accumulated power-on hours of the Target at the time the self-test completed.
- **LBA of first failure** This field contains the LBA of the first logical block address where a self-test error occurred. If no errors occurred during the self-test or the error is not related to a LBA then the field will be FFFFFFFFFFFFFFFFh.
- **Sense Key, Additional Sense Code and Additional Sense Code Qualifier** These fields will contain the additional information relating to the error or exception conditions during self-test.

See Section 8.45 “SEND DIAGNOSTIC (1D)”, for detailed listing of operations carried out by SEND DIAGNOSTIC command and Power on Diagnostics.

8.8.12 Log Sense Page 15

This page contains information about Background Medium Scan operations.

Table 115 Log Sense Page 15

Byte	Bit							
	7	6	5	4	3	2	1	0
0	Reserved		Page code = 15h					
1	Reserved							
2-3	Page Length = (19 + 24N -3)							
	Background Medium Scan parameters							
4-19	BMS Status Parameter							
20-43	First Medium Scan Parameter							
	...							
19+24N	Last Medium Scan Parameter							

The following table describes the BMS Status Parameter structure.

Table 116 BMS Status Parameter structure

Byte	Bit							
	7	6	5	4	3	2	1	0
0-1	Parameter Code = 0000h							
2	DU=0	DS=0	TSD=0	ETC=0	TMC=0		F&L = 11b	
3	Page Length = 0Ch							
4-7	Power On Minutes							
8	Reserved = 0							
9	BMS Status							
10-11	Number of Background Scans Performed							
12-13	Medium Scan Progress							
14-15	Number of Background Medium Scans Performed							

- **Power On Minutes** indicates the total power on minutes at the time the log page is requested
- **BMS Status** is described in the following table

Table 117 BMS Status

BMS Status	Description
00h	No scans active
01h	Background medium scan is active
03h-04h	Not supported
05h	Background scan halted due to medium formatted without P-List
06h	Background scan halted due to a vendor-specific cause
07h	Background scan halted due to temperature out of range
08h	Scan suspended until BMS Interval Timer expires
09h - FFh	Reserved

- The **Number of Background Scans Performed** field indicates the total number of back ground scans (i.e. total

number of Background Medium Scans PLUS number of Background Prescan) that have been performed over the life of the drive.

- **Medium Scan Progress** is a percent complete indication of the medium scan. The returned value is a numerator that has 65,536(1 00 00h) as its denominator.
- **Number of Background Medium Scans Performed** field indicates the number of background mediumscans that have been performed over the life of the drive.

The following table describes the Medium Scan Parameter structure.

Table 118 Medium Scan Parameter structure

Byte	Bit							
	7	6	5	4	3	2	1	0
0-1	Parameter Code = 0001h - 0800h							
2	DU=0	DS=0	TSD=0	ETC=0	TMC=0		F&L = 11b	
3	Page Length = 14h							
4-7	Power On Minutes							
8	Reassign Status				Sense Key			
9	Additional Sense Code							
10	Additional Sense Code Qualifier							
11	Head				(MSB) Cylinder			
12-13	(MSB) Cylinder (LSB)							
14	H	Type	Sector					
15	Sector							
16-23	LBA							

- **Power On Minutes** indicates the total power on minutes at the time the error was detected.
- **Reassign Status** is set as shown below. Reassignment during the background scan is not supported.

Table 119 Reassign Status

Reassign Status	Description
0h	No reassignment needed This value is not reported, if LOWIR bit is set to 1 in Background Control Mode Page.
1h	Reassignment pending receipt of Reassign command or write command (if auto write reallocation is allowed) from the initiator
2h-4h	Not supported
5h	Error was detected by BGMS, and was successfully rewritten. This value is not reported, if LOWIR bit is set to 1 in Background Control Mode Page.
6h	Error was detected by BGMS, and was successfully reassigned by Application Client. Contains valid data.
7h – Fh	Reserved

Additional Sense Code and Additional Sense Code Qualifier provide details about the error detected.

8.8.13 Log Sense Page 18

This page contains protocol-specific log parameters.

Table 120 Log Sense Page 18

Byte	Bit							
	7	6	5	4	3	2	1	0
0	Page code = 18h							
1	SubPage Code (00h)							
2-3	(MSB) Page Length (D8h) (LSB)							
Protocol-specific log parameters								
4-111	First Protocol-specific log parameter - Primary Port							
112-219	Last Protocol-specific log parameters - Secondary Port							

Table 121 SAS Log Descriptor (part 1 of 3)

Byte	Bit							
	7	6	5	4	3	2	1	0
0-1	(MSB) Parameter Code (0001h for primary port; 0002h for secondary (LSB)							
2	DU (=0)	Obsolete	TSD (=0)	ETC (=0)	TMC (00b)		Format and Linking	
3	Parameter Length (68h)							
4	Reserved				Protocol IDENTIFIER (6h)			
5	Reserved							
6	Generation Code							
7	Number of PHYs (01h)							
8	Reserved							
9	PHY IDENTIFIER (00h)							
10	Reserved							
11	SAS PHY Log Descriptor Length (60h)							
12	Reserved	Attached Device Type			Attached Reason			
13	Reason				Negotiated Physical Link Rate			

Table 122 SAS Log Descriptor (part 2 of 3)

Byte	Bit							
	7	6	5	4	3	2	1	0
14	Reserved				Attached SSP Initiator Port	Attached STP Initiator Port	Attached SMP Initiator Port	Reserved
15	Reserved				Attached SSP Target Port	Attached STP Target Port	Attached SMP Target Port	Reserved
16-23	(MSB) SAS Address (the address of the target port) (LSB)							
24-31	(MSB) Attached SAS Address (the address received in the incoming IDENTIFY) (LSB)							
32	Attached PHY Identifier (the PHY identifier received in the incoming IDENTIFY)							
33-39	Reserved							
40-43	(MSB) Invalid Dword Count (LSB)							
44-47	(MSB) Running Disparity Error Count (LSB)							
48-51	(MSB) Loss of Dword Synchronization (LSB)							
52-55	(MSB) PHY Reset Problem (LSB)							
56-57	Reserved							
58	PHY event Descriptor Length (0Ch)							
59	Number of Event Descriptors (04h)							
60-62	Reserved							
63	Phy Event Source (01h) (Invalid Dword Count)							
64-67	(MSB) PHY Event (LSB)							
68-71	(MSB) Peak Value Detector Threshold (00h) (LSB)							

Table 123 SAS Log Descriptor (part 3 of 3)

Byte	Bit							
	7	6	5	4	3	2	1	0
72-74	Reserved							
75	PHY Event Source (02h) (Running Disparity Error Count)							
76-79	(MSB) PHY Event (LSB)							
80-83	(MSB) Peak Value Detector Threshold (00h) (LSB)							
84-86	Reserved							
87	PHY Event Source (03h) (Loss of Dword Sync)							
88-91	(MSB) PHY Event (LSB)							
92-95	(MSB) Peak Value Detector Threshold (00h) (LSB)							
96-98	Reserved							
99	PHY Event Source (04h) (PHY Reset Problem)							
100-103	(MSB) PHY Event (LSB)							
104-107	(MSB) Peak Value Detector Threshold (00h) (LSB)							

- **Attached Device Type**: set to the value received by this PHY during an Identify Sequence.
- **Attached Reason:** If the phy is a physical phy and a SAS phy or expander phy is attached, then the ATTACHED REASON field indicates the value of the REASON field in the last received IDENTIFY address frame (see Table 29) during the identification sequence. If the phy is a physical phy and a SATA phy is attached, then the ATTACHED REASON field shall be set to 0h after the initial Register - Device to Host FIS has been received. If the phy is a virtual phy, then the ATTACHED REASON field shall be set to 0h.
- **Reason:** The REASON field indicates the reason for the last link reset sequence as reported in the last transmitted IDENTIFY address frame. (see Table 29). If the phy is a physical phy and a SATA phy is attached, then the REASON field indicates the reason for the link reset sequence. For Reason field, refer Table 31.
- **Negotiated PHY Link Rate**: set to the link rate negotiated during last Link Reset Sequence.
  - set to 8h when the PHY is enabled and the negotiated speed is 1.5G
  - set to 9h when the PHY is enabled and the negotiated speed is 3.0G
  - set to Ah when the PHY is enabled and the negotiated speed is 6.0G
  - set to Bh when the PHY is enabled and the negotiated speed is 12.0G

- **The GENERATION CODE** field is a one-byte counter that shall be incremented by one by the drive every time the values in this mode page or the SAS-3 Phy mode page field values are changed. A GENERATION CODE field set to 00h indicates the generation code is unknown. The drive shall wrap this field to 01h as the next increment after reaching its maximum value (i.e., FFh). The GENERATION CODE field is also contained in the Protocol-Specific Port log page and is used to correlate phy settings across mode page and log page accesses.
- **Attached Reason:** indicates the value of the REASON field received in the IDENTIFY address frame.
- **Attached Initiator Port bits:** set to the value received by this PHY during an Identify Sequence.
- **Attached Target Port:** set to the value received by this PHY during an Identify Sequence.
- **SAS ADDRESS:** field contains the SAS address *transmitted* by this PHY during an Identify Sequence.
- **Attached SAS ADDRESS:** field contains the SAS address *received* by this PHY during an Identify Sequence.
- **Attached PHY Identifier:** field contains the SAS PHY Identifier *received* by this PHY during an Identify Sequence.
- **INVALID DWORD COUNT:** indicates the number of invalid DWords that have been received outside of phy reset sequences. The count stops at the maximum value.
- **RUNNING DISPARITY ERROR COUNT:** RUNNING DISPARITY ERROR COUNT increments by one when the port has acquired dword synchronization and detects a transmission word containing a running disparity error at the receiver. When the port has lost dword synchronization, the Running Disparity Error Count is not incremented. The count stops at the maximum value.
- **LOSS OF DWORD SYNCRONIZATION:** indicates the number of times the phy has lost dword synchronization and restarted the link reset sequence of phy reset sequences. The count stops at the maximum value.
- **PHY RESET PROBLEM:** indicates the number of times the phy reset sequence has failed due to a failure to gain dword sync in the retry speed match speed negotiation. The count stops at the maximum value.
- **PHY Event Descriptor Length** indicates the number of bytes in the PHY event descriptor, which is 0Ch.
- **Number of Event Descriptors** indicates the number of PHY event descriptors in the PHY event descriptor list, which is 04h.
- **Event Source (01h) - Invalid Dword Count**. The "PHY Event" field following this event source contains the number of invalid Dwords detected by the PHY since power on. The "Peak Value Detector Threshold" is set to 00000000h to indicate this is a counter and not a peak value detector.
- **Event Source (02h) - Running Disparity Error Count**. The "PHY Event" field following this event source contains the number of disparity errors detected by the PHY since power on. The "Peak Value Detector Threshold" is set to 00000000h to indicate this is a counter and not a peak value detector.
- **Event Source (03h) - Loss of Dword Synchronization Count**. The "Phy Event" field following this event source contains the number of times the receiver has lost Dword synchronization since power on. The "Peak Value Detector Threshold" is set to 00000000h to indicate this is a counter and not a peak value detector.
- **Event Source (04h) - PHY Reset Problem Count.** The "PHY Event" field following this event source contains the number of times the PHY has encountered a PHY reset problem condition since power on. The "Peak Value Detector Threshold" is set to 00000000h to indicate this is a counter and not a peak value detector.

8.8.14 Log Sense Page 19h - General Statistics and Performance

Table 124 Log Sense Page 19h - General Statistics and Performance

Byte	Bit							
	7	6	5	4	3	2	1	0
0	DS = 0	SPF = 0	Page Code = 19h					
1	Sub Page Code = 00h							
2-3	Page Length = 005Ch							
4-5	Parameter Code = 0001h							
6	DU = 0	Obsolete	TSD = 0	ETC = 0	TMC = 0		Format and Linking = 10b	
7	Parameter Length = 40h							
8-15	Number of Read Commands							
16-23	Number of Write Commands							
24-31	Number of Logical Blocks Received							
32-39	Number of Logical Blocks Transmitted							
40-47	Read Command Processing Intervals							
48-55	Write Command Processing Intervals							
56-63	Weighted Number of Read Commands plus Write Commands							
64-71	Weighted Read Command Processing plus Write Command Processing							
72-73	Parameter Code = 0002h							
74	DU = 0	Obsolete	TSD = 0	ETC = 0	TMC = 0		Format and Linking = 10b	
75	Parameter Length = 08h							
76-83	Idle Time Intervals							
84-85	Parameter Code = 0003h							
86	DU = 0	Obsolete	TSD = 0	ETC = 0	TMC = 0		Format and Linking = 11b	
87	Parameter Length = 08h							
88-95	Time Interval Descriptor							

- **Number of Read Commands** indicates the number of read commands received by the logical unit.
- **Number of Write Commands** indicates the number of write commands received by the logical unit.
- **Number of Logical Blocks Received** indicates the number of logical blocks received by any SCSI target port for the logical unit as a result of write commands.
- **Number of Logical Blocks Transmitted** indicates the number of logical blocks transmitted by any SCSI target port for the logical unit as a result of read commands.
- **Read Command Processing Interval** is not supported and is set to 0.
- **Write Command Processing Interval** is not supported and is set to 0.
- **Weighted Number of Read Commands Plus Write Commands** is not supported and is set to 0.
- **Weighted Read Command Processing Plus Write Command Processing** is not supported and is set to 0.

- **Idle Time Intervals** indicates the cumulative number of idle times spent while there are no commands in the task set and there are no commands being processed by the logical unit.

Idle time is calculated using the time interval in parameter 0003h:
idle time = (time increments not processing commands x time interval)
The time interval descriptor contains the time interval in seconds.

Table 125 Time Interval Descriptor

Byte	Bit							
	7	6	5	4	3	2	1	0
0-3	Exponent							
4-7	Integer							

- **Exponent** contains the negative power of 10 exponent to multiply with the Integer field.
- **Integer**, when multiplied by the exponent, contains the value that represents one time interval.

The Exponent and Integer are set to the equivalent of 50ms ($5x10^{-2}$ seconds).

8.8.15 Log Sense Page 1A

Table 126 Log Sense Page 1A

Byte	Bit							
	7	6	5	4	3	2	1	0
0	Reserved		Page code = 1Ah					
1	Sub Page Code (00h)							
2-3	Page Length (30h)							
4-5	Parameter Code 0001h							
6	DU	Obsolete	TSD	ETC	TMC	TMC	FMT & Linking	FMT & Linking
7	Parameter Length = 4							
8-11	Accumulated Transitions to Active State							
12-13	Parameter Code 0002h							
14	DU	Obsolete	TSD	ETC	TMC	TMC	FMT & Linking	FMT & Linking
15	Parameter Length = 4							
16-19	Accumulated Transitions to Idle_A							
20-21	Parameter Code 0003h							
22	DU	Obsolete	TSD	ETC	TMC	TMC	FMT & Linking	FMT & Linking
23	Parameter Length = 4							
24-27	Accumulated Transitions to Idle_B							
28-29	Parameter Code 0004h							
30	DU	Obsolete	TSD	ETC	TMC	TMC	FMT & Linking	FMT & Linking
31	Parameter Length = 4							
32-35	Accumulated Transitions to Idle_C							
36-37	Parameter Code 0008h							
38	DU	Obsolete	TSD	ETC	TMC	TMC	FMT & Linking	FMT & Linking
39	Parameter Length = 4							
40-43	Accumulated Transitions to Standby_Z							
44-45	Parameter Code 0009h							
46	DU	Obsolete	TSD	ETC	TMC	TMC	FMT & Linking	FMT & Linking
47	Parameter Length = 4							
48-51	Accumulated Transitions to Standby_Y							

8.8.16 Log Sense Page 2F

This page contains SMART Status and Temperature Reading.

Table 127 Log Sense Page 2F

Byte	Bit							
	7	6	5	4	3	2	1	0
0	Reserved		Page code = 2Fh					
1	Reserved							
2-3	Page Length = 8							
4-5	Parameter Code = 0000h							
6	DU = 0	DS = 0	TSD = 0	ETC = 0	TMC = 0		F&L = 11b	
7	Parameter Length = 04h							
8	SMART Sense Code Byte							
9	SMART Sense Qualifier							
10	Most Recent Temperature Reading							
11	Vendor HDA Temperature Trip Point							
12-13	Parameter Code = 0001h							
14	DU = 0	DS = 0	TSD = 0	ETC = 0	TMC = 0		F&L = 11b	
15	Parameter Length = 03h							
16	Internal Environment status Current Value							
17	Internal Environment status Worst Value							
18	Internal Environment status Threshold Value							

8.8.17 Log Sense Page 30

This page contains Performance Counters.

Table 128 Log Sense Page 30

Byte	Bit							
	7	6	5	4	3	2	1	0
0	Reserved		Page code = 30h					
1	Reserved							
2-3	Page Length = 0030h							
4-5	Parameter Code = 0000h							
6	DU = 0	DS = 0	TSD=0	ETC=0	TMC = 0		F&L = 00b	
7	Parameter Length = 2Ch							
8-9	Zero Seeks							
10-11	Seeks > = to 2/3							
12-13	Seeks > = 1/3 and < 2/3							
14-15	Seeks > = 1/6 and < 1/3							
16-17	Seeks > = 1/12 and < 1/6							
18-19	Seeks > 0 and < 1/12							
20-23	Reserved = 0							
24-25	Overrun Counter							
26-27	Under run Counter							
28-31	Device Cache Full Read Hits							
32-35	Device Cache Partial Read Hits							
36-39	Device Cache Write Hits							
40-43	Device Cache Fast Writes							
44-47	Device Cache Read Misses							
48-51	Reserved = 0							

Page 30h returns performance counter information. This includes seek counters and buffer overrun/under run counters.
The appropriate seek counter is incremented once during execution of Pre-Fetch, Read, Verify, Write, Write and Verify, Write Same, and Seek commands.
Buffer Overrun conditions are detected during Read commands.
Buffer Under run conditions are detected during Verify with ByteChk=1, Write, Write and Verify, and Write Same commands.
Only one seek counter is incremented for each of these commands and the counter is incremented only once per command. The length of the initial seek that is required to access the first Logical Block specified for the SCSI command determines which seek counter is incremented. The Zero Seek counter is incremented if a seek is not required or if only a head switch is required to access the first Logical Block. After the initial seek, no further counter incrementing is performed for that command.

Note: The length of a seek as reported in page 30 may differ from expected results. The reason for this is that the drive executes Idle Time Functions between operations of the drive. The seek operations that occur in Idle Time Functions are not directly entered into page 30 seek counters but they change the length of the following seek. This is because after the Idle Time Function is completed, the heads will not necessarily be in the same position as they were at the completion of the previous command.

A buffer overrun or under run condition occurs when the Initiator does not transfer data to or from the Target data buffer fast enough to keep up with reading or writing the media. The buffer overrun counter is incremented during operations that require a Data In phase when a buffer full condition prevents the continued transfer of data from the

media to the data buffer. The buffer under run counter is incremented during operations that require a Data Out phase when a buffer empty condition prevents the start or continuation of a data transfer from the data buffer to the media (or a data transfer from the media for a Verify command with BytChk=1).
Buffer Overrun conditions are detected during the following SCSI commands:

- READ (6)
- READ (10)

Buffer Under Run conditions are detected during the following SCSI commands:

- VERIFY WITH BytChk=1
- VERIFY (16) WITH BytChk=1
- WRITE (6)
- WRITE (10)
- WRITE AND VERIFY
- WRITE AND VERIFY (16)
- WRITE SAME
- WRITE SAME (16)
- **ZERO SEEKS**
  The number of times no seek was required. The operation may have resulted in a head switch.
- **SEEKS >=2/3 DISK**
  The number of seeks equal to or greater than 2/3 of the disk.
- **SEEKS >=1/3 AND < 2/3 DISK**
  The number of seeks equal to or greater than 1/3 and less than 2/3 of the disk.
- **SEEKS >=1/6 AND < 1/3 DISK**
  The number of seeks equal to or greater than 1/6 and less than 1/3 of the disk.
- **SEEKS >=1/12 AND < 1/6 DISK**
  The number of seeks equal to or greater than 1/12 and less than 1/6 of the disk.
- **SEEKS > 0 AND < 1/12 DISK**
  The number of seeks less than 1/12 of the disk.
- **OVERRUN COUNTER**
  The number of times that data was available to be transferred from the media but the device buffer still contained data that had not been retrieved by the Initiator. Consequently, the disk had to take additional revolutions until the buffer was available to accept data.
- **UNDER RUN COUNTER**
  The number of times that the drive was ready to transfer data to its disk (on a write), but its buffer was empty (i.e., had not been filled by the Initiator), thus the disk was forced to take extra revolutions.
- **DEVICE CACHE FULL READ HITS**
  The number of times that all of the data requested by the read operation was obtained from the device read or write cache.
- **DEVICE CACHE PARTIAL READ HITS**
  The number of times that a portion, but not all, of the data requested by the read operation was obtained from the device read or write cache. A physical operation to the device media was required to obtain the remaining data.
- **DEVICE CACHE WRITE HITS**
  The number of times that the data associated with a write operation replaces, or is combined with, existing data in the device write cache, thereby eliminating a write operation.
- **DEVICE CACHE FAST WRITES**
  The number of times that space was available in the device write cache for the data associated with a write operation and a response was returned immediately.
- **DEVICE CACHE READ MISSES**
  The number of times that none of the data requested by the read operation was obtained from the read cache.

The statistics reported by this page are lost on a self-initiated reset or when the Drive is powered off.Even though the DS field equals zero, the parameters on this page are not savable.

8.8.18 Log Sense Page 37

This page contains a series of miscellaneous data counters including information about predictive failure analysis occurrences.

Table 129 Log Sense Page 37

Byte	Bit							
	7	6	5	4	3	2	1	0
0	Reserved		Page code = 37h					
1	Reserved							
2-3	Page Length = 0030h (48)							
4-5	Parameter Code = 0000h							
6	DU=0	DS=0	TSD=0	ETC=0	TMC = 0		F&L = 00b	
7	Parameter Length = 2Ch							
8 - 11	(MSB) Power on Hours (hours only) (LSB)							
12 - 19	(MSB) Total Bytes Read (LSB)							
20 - 27	(MSB) Total Bytes Written (LSB)							
28	Max Drive Temp (degrees Celsius)							
29 - 30	(MSB) GList Size (LSB)							
31	Number of Information Exceptions							
32	MED EXC	HDW EXC	Reserved = 0					
33 - 40	Total Read Commands							
41 - 48	Total Write Commands							
49	Reserved = 0							
50-51	Flash Correction Count							

The **Power on Hours** field specifies the total time the drive has been powered on in hours only.
The **Max. Drive Temperature** field specifies the maximum temperature, in degrees Celsius, the drive has ever reached.
The **Glist Size** field gives the total number of LBAs that have been reassigned on the drive.
The Number of Information Exceptions field gives the number of Information Exceptions during the life of the drive and not the number of Information Exceptions that have been reported. The number of reported Information Exceptions may be less due to the settings of Mode Page 0x1C.NOTE: This field does not include occurrences of any Information Exception Warnings.
If set, the **Media Exception and Hardware Exception** bits indicate that an Information Exception has occurred during the life of the drive. These flags are set during an Information Exception that may or may not coincide with the reporting of an Information Exceptions as mentioned above.
Total Read Commands counter is incremented for each Read (6) and Read (10) command received.
Total Write Commands counter is incremented for each Write (6), Write (10), Write Verify and Write Verify (16) command received.
Flash Correction Count is incremented each time ECC correction is applied to data stored in Flash ROM.

8.9 MODE SELECT (6) - (15)

Table 130 Mode Select (6) - (15)

Byte	Bit							
	7	6	5	4	3	2	1	0
0	Command Code = 15h							
1	Reserved = 0			PF=1	Reserved = 0			SP
2 3	Reserved = 0							
4	Parameter List Length							
5	VU = 0		Reserved = 0				FLAG	LINK

The MODE SELECT(6) - (15) command provides a means for the Initiator to specify LUN or device parameters to the Target. It also allows an Initiator to specify options the Target uses in error recovery, caching, and formatting. There is a single set of Mode Page parameters shared by all Initiators.

- **PF** A PF (Page Format) bit value of one indicates that the data sent by the Initiator after the Mode Select Header and the Block Descriptor, if any, complies to the Page Format. The Target ignores this field since it only accepts mode parameters in the Page Format.
- **SP** Save Pages. This indicates

Table 131 Save Pages

0	The drive shall not save the pages sent during the Data Out phase but will use them for all following commands until the power is removed, a reset is received, or a new MODE SELECT command is received.
1	The drive will save the data in the reserved area of the disk. It will be used for all the following commands until another MODE SELECT command is issued. This information is maintained over a power cycle or reset of the drive.

- **Parameter List Length** This specifies the number of bytes to be sent from the Initiator. A parameter list length of zero suppresses data transfer and is not considered an error.

The MODE SELECT parameter list contains a 4-byte header followed by zero or one block descriptor followed by zero or more pages. The pages that are valid with this command are defined in the addendum under the heading **Mode Select Data**, as they vary with the drive model.

Application Note
The Initiator should issue a MODE SENSE command requesting all Changeable values (see PCF field in byte two of the CDB in) prior to issuing a MODE SELECT command. This is necessary to find out which pages are implemented by the drive and the length of those pages. In the Pages of the MODE SENSE command the drive will return the number of bytes supported for each Page. The Page Length set by the Initiator in the MODE SELECT command must be the same value as returned by the drive in MODE SENSE Page Length. If not, the drive will return *Check Condition* status with sense key of *Illegal Request*.

Note: If an Initiator sends a MODE SELECT command that changes any parameters that apply to other Initiators, the drive shall generate a unit attention condition for all Initiators except for the one that issued the MODE SELECT command. The drive shall set the additional sense code to Parameters Changed (2Ah).

8.10 MODE SELECT (10) - (55)

Table 132 Mode Select (10) - (55)

Byte	Bit							
	7	6	5	4	3	2	1	0
0	Command Code = 55h							
1	Reserved = 0			PF=1	Reserved = 0			SP
2-6	Reserved = 0							
7-8	(MSB) Parameter List Length (LSB)							
9	VU = 0		Reserved = 0				FLAG	LINK

The MODE SELECT (10) - (55) command provides a means for the Initiator to specify LUN or device parameters to the Target.

See the MODE SELECT (6) - (15) command for a description of the fields in this command.

8.11 MODE SENSE (6) - (1A)

Table 133 MODE SENSE (6) - (1A)

Byte	Bit							
	7	6	5	4	3	2	1	0
0	Command Code = 1Ah							
1	Reserved=0			RSVD	DBD	Reserved = 0		
2	PCF		Page Code					
3	Subpage Code							
4	Allocation Length							
5	VU = 0		Reserved = 0				FLAG	LINK

The MODE SENSE (6) - (1A) command provides a means for the drive to report various device parameters to the Initiator. It is the complement to the MODE SELECT command.

If the **DBD** (Disable Block Descriptor) bit is zero, the Target will return a Block Descriptor. If the DBD bit is set to 1, the Target will not return a Block Descriptor.

Allocation Length indicates the maximum number of bytes that the Initiator has set aside for the DATA IN phase. A value of zero is not considered an error. If the allocation length is smaller than the amount available, that portion of the data up to the allocation length will be sent. This may result in only a portion of a multi-byte field being sent.

Page Control Field: PCF (Page Control Field) defines the type of Page Parameter values to be returned.

PCF Meaning

0 0 Report current values. The drive returns the current values under which the logical unit is presently configured for the page code specified. The current values returned are

1. Initially following power-up but before the media is accessed, the default values become current. Once the media can be accessed, the saved values are read from the Reserved Area and become current.
2. The parameters set in the last successful MODE SELECT command.
3. The saved values if a MODE SELECT command has not been executed since the last power-on, hard RESET condition, or TARGET RESET message.

Following the completion of start-up, execution of the MODE SELECT command can modify the current values.

Note: Those parameters associated with format are not considered current and are not saved until the successful completion of a FORMAT UNIT command.

In addition, the current values take on the saved values after a reset if the parameters were saved. If the Page Code is 3Fh, then all pages implemented by the Target are returned to the Initiator with fields and bit values set to current values.

If the Page Code is not 3Fh, the page defined by the Page Code, if supported by the Target, is returned with fields and bits set to current values.

Note: The drive will not process the MODE SELECT command until the completion of spin-up. Therefore, the Initiator cannot modify the current values prior to the saved values being read in.

0 1 Report changeable value. The drive returns the changeable values for the page code specified. The page requested is returned containing information that indicates which fields are changeable. All bits of parameters that are changeable shall be set to one. Parameters that are *defined by the drive* shall be set to zero. If any part of a field is changeable, all bits in that field shall be set to one.

Note: For a value field such as the buffer ratios of page 2 the bit field will not indicate the range of supported values but rather that the field is supported.

1 0 Report default value. The drive returns the default values for the page code specified. The parameters not supported by the drive are set to zero.

1 1 Report saved value. The drive returns the saved value for the page code specified.
Saved values are one of the following:

- the values saved as a result of MODE SELECT command
- identical to the default values
- zero when the parameters are not supported

The Page Length byte value of each page returned by the drive indicates up to which fields are supported on that page.

Page Code: This field specifies which page or pages to return. Page code usage is defined in the figure below.

Table 134 Page Code Usage

Page Code	Description
00h - 1Ch	Return specific page, if supported.
3Fh	Return all supported pages.

If a Page Code of 3Fh is used, MODE SENSE returns the pages in ascending order with one exception. Page 0 is always returned last in response to a MODE SENSE command.

If an unsupported page is selected, the command is terminated with a CHECKCONDITION status and available sense of ILLEGAL REQUEST/INVALID FIELD IN CDB.

Subpage Code: This field specifies the subpage to return, and may be set to a specific page, or to FFh for all supported subpages.

8.11.1 Mode Parameter List

The mode parameter list contains a header followed by zero or one block descriptors followed by zero or more variable length pages.

8.11.1.1 Header

The header used for the 6-byte CDB is defined below.

Table 135 Mode parameter header (6)

Byte	Bit							
	7	6	5	4	3	2	1	0
0	Mode Data Length							
1	Medium Type = 0							
2	WP=0	Reserved=0		DPOFUA = 1	Reserved = 0			
3	Block Descriptor Length (=0 or 8)							

The header used for the 10-byte CDB is defined below.

Table 136 Mode parameter header (10)

Byte	Bit							
	7	6	5	4	3	2	1	0
0 – 1	(MSB) Mode Data Length (LSB)							
2	Medium Type = 0							
3	WP=0	Reserved=0		DPOFUA =1	Reserved = 0			
4	Reserved = 0							Long LBA
5	Reserved = 0							
6 – 7	(MSB) Block Descriptor Length (LSB)							

- **Mode Data Length**. When using the MODE SENSE command, the mode data length field specifies the length in bytes of the following data that is available to be transferred. The mode data length does not include the length byte itself. When using the MODE SELECT command, this field is reserved.
- **Medium Type** field is always set to zero in the drive (Default Medium Type).
- **WP**. When used with the MODE SELECT command, the Write Protect (WP) bit is reserved.
  When used with the MODE SENSE command, a Write Protect (WP) bit of zero indicates that the medium is write enabled.
- **DPOFUA** bit value of 1 indicates that the Target supports the FUA and DPO bits in the Read and Write Commands.
- **LONGLBA** bit value of 0 indicates that any following Block Descriptor uses the Short LBA Block Descriptor format. A LONGLBA bit value of 1 indicates that any following Block Descriptor uses the Long LBA Block Descriptor format
- **Block Descriptor Length** specifies the length in bytes of the block descriptor. Values of 0, 8, and 16 are supported by the Target, respectively corresponding to an absent Block Descriptor, a single Short LBA Block Descriptor, and a single Long LBA Block Descriptor.

***Note**: DPOFUA is ignored during Mode Select command processing although the SCSI Standard states that it is reserved during Mode Select. Ignoring it allows the Mode Sense Parameter List for the byte containing this bit to be re-used as a Mode Select Parameter List.*

8.11.1.2 Block Descriptors

Table 137 Short LBA Mode Parameter Block Descriptor

Byte	Bit							
	7	6	5	4	3	2	1	0
0 – 3	(MSB) Number of Blocks (LSB)							
4	Reserved = 0							
5 – 7	(MSB) Block Length (LSB)							

Table 138 Long LBA Mode Parameter Block Descriptor

Byte	Bit							
	7	6	5	4	3	2	1	0
0 – 7	(MSB) Number of Blocks (LSB)							
8-11	Reserved = 0							
12-15	(MSB) Block Length (LSB)							

The Block descriptor provides formatting information about the Number of Blocks (user addressable) to format at the specified Block Length.

- Number of Blocks

  When used with the MODE SELECT command, the **Number of Blocks** field must be
  - Zero to indicate not to change available blocks
  - 0xFFFFFFFF (Short LBA) or 0xFFFFFFFFFFFFFFFF (Long LBA) to indicate all available blocks
  - The exact number of blocks in the data area of the drive, which can be obtained with the MODE SENSE
  - The number of blocks less than exact one, in order to **CLIP** the number of blocks

  Any other value is invalid and causes the command to fail with *Check Condition* status.

  When returned by the MODE SENSE command, the field contains the exact number of blocks.
- Block Length

  The **Block Length** field reflects the number of bytes of user data per sector (not including any protection information). When used with the MODE SELECT command, the **Block Length** field must contain a value which is 4096, 4096 + 8PI, 4112, 4160, 4224 or zero. Otherwise the drive will terminate the command with *Check Condition* status.

  A FORMAT UNIT command is required to cause these parameters to become current only if the block length parameter is different from the current block length.

8.11.1.3 Page Descriptor

Table 139 Mode Parameter Page Format

Byte 0	PS	SPF	Page Code
Byte 1	Page Length		
Byte 2-n	Mode Parameters		

Each mode page contains a page code, a page length, and a set of mode parameters.

When using the MODE SENSE command, a Parameter Savable (PS) bit of one indicates that the mode page can be saved by the drive in the reserved area of the drive. A PS bit of zero indicates that the supported parameters cannot be saved. When using the MODE SELECT command, the PS bit is reserved (zero).

SPF (Sub-Page Format) is set to zero to indicate the short page format is used. The bit is set to one to indicate the long format is used, supporting sub-pages. The drive supports the following mode page codes:

Table 140 Mode Parameter Page Format

Page	Description	PS
00	Vendor Unique Parameters	1
01	Read-Write Error Recovery Parameters	1
02	Disconnect/Reconnect Control Parameters	1
03	Format Device Parameters	0
04	Rigid Disk Geometry Parameters	0
07	Verify Error Recovery Parameters	1
08	Caching Parameters	1
0A	Control Mode Page	1
0C	Notch Parameters	1
19	Port Control Page	1
1A	Power Control Parameters	1
1C	Informational Exceptions Control	1

The page length field specifies the length in bytes of the mode parameters that follow. If the Initiator does not set this value to the value that is returned for the page by the MODE SENSE command, the drive will terminate the command with *Check Condition* status.

8.11.2 Mode Page 00 (Vendor Unique Parameters)

Table 141 Vendor Unique Parameters - Page 00

Byte	Bit								Default
	7	6	5	4	3	2	1	0	
0	PS	0	Page Code = 00h						80h
1	Page Length = 0Eh								0Eh
2	Reserved				MRG	Reserved		Ignored	00h
3	Reserved	VGMDE	Reserved				RRNDE	Reserved	00h
4	Reserved								00h
5	Reserved			FDD	Reserved		CAEN	Ignored	02h
6	IGRA	AVERP	Reserved		OCT (high nibble)				00h
7	Overall Command Timer (low byte)								00h
8	Reserved								00h
9	Temperature Threshold								00h
10	Command Aging Limit (Hi byte)								00h
11	Command Aging Limit (Low byte)								30h
12	Read Reporting Threshold								16h
13	Write Reporting Threshold								14h
14	DRRT	Ignored			FFMT	Ignored			00h
15	Ignored	Reserved	FCERT	Ignored	CERTIFY_ RDP_BIT	Ignored	Reserved		00h

Fields marked in the table as 'Ignored' are not used or checked by the drive. They will be initialized to zero but can be set as desired for compatibility with older drives.

- **MRG** (Merge Glist into Plist) bit is set to 1 for merging the Glist entries into the Plist during FORMAT UNIT command.
- **VGMDE** (Veggie Mode) bit set to 1 will cause the drive to execute random self-seeks. To enable this mode, the initiator must perform the mode select to set the bit while the drive is spinning, then Stop Unit, then Start Unit. VGMDE set to 0 disables the self-seeks (normal operation).
- **RRNDE** (Report Recovered Non Data Errors) bit controls the reporting of recovered Non Data Errors when the PER bit is set. If RRNDE is set, recovered Non Data Errors are reported. If the RRNDE bit is not set, then recovered Non Data Errors are not reported.
- **FDD**(Format Degraded Disable) controls the reporting of Format Degraded sense data for Test Unit Ready commands when the drive is in a format degraded state. When the FDD bit is one, Format Degraded sense data will not be reported for a Test Unit Ready command. When the FDD bit is zero, Format Degraded sense data will be reported for Test Unit Ready commands when the drive is in a format degraded state. This bit does not affect the reporting of Format Degraded conditions for any media access commands.
- **CAEN** (Command Aging Enable) When set this bit causes the Command Age Limit timer to be used to avoid commands waiting in the command queue for an indefinite period. When commands have been in the queue for a period of time greater than the timer limit they will be reordered to be executed on a first come first served basis. When this bit is reset, commands are always executed based on the queue reordering rules.

- **IGRA** (Ignore Reassigned LBA) bit works in conjunction with the RC bit (Mode Page 01h, byte 2, bit 4).The main purpose of this bit is to avoid undesirable read processing time delays due to reassigned LBA processing for continuous data availability requirements such as Audio Visual applications. If IGRA is set to one and RC is set to one, out-of-line reassigned LBAs will not be processed. If IGRA is set to one and RC is set to zero, or if IGRA is set to zero, reassigned LBAs will be processed normally.
- **AVERP** (AV ERP Mode) bit is set to one in order to specify maximum retry counts during Read DRP. When AVERP bit is set to one, the maximum retry counts for read operations is specified by Read Retry Count (Mode Page 1 Byte 3). AVERP bit is set to zero to specify that the drive shall process read DRP up to the default maximum retry count when Read Retry Count is set to a non-zero value.
- **OCT**(Overall Command Timer) controls the maximum command execution time, from receipt by the drive until status is returned. If the command is unable to complete in the specified amount of time, it will be aborted with Check Condition status, Aborted Command sense key. The Overall Command Timer does not alter the behavior of the Command Aging Limit or Recovery Time Limit. Each unit of this timer is 50 milliseconds. Setting the value to zero disables the feature. OCT might not work if command exceeds time but data is available for cache transfer
- **Temperature Threshold** specifies the threshold value in degrees Celsius for the thermal sensor Information Exception Warning; the reporting of which is controlled by Mode Page 0x1C. A value of 0 selects the default value (85 degrees Celsius).
- **Command Aging Limit** This value controls the maximum time a command should wait in the command queue when the CAEN bit is set. Each unit of this timer is 50ms.
- **Read Reporting Threshold** specifies the recovery step that must be exceeded to report recovered data errors during read operations when PER=1.For example, if the Read Reporting Threshold is set to 22, recovered read errors will be reported starting at recovery step 23
- **Write Reporting Threshold** specifies the recovery step that must be exceeded to report recovered data errors during write operations when PER=1.For example, if the Write Reporting Threshold is set to 20, recovered write errors will be reported starting at recovery step 21.
- **DRRT** (Disable Restore Reassign Target) bit which disables the reading and restoration of the target LBA during a Reassign Blocks command. If the DRRT bit is zero, the reassign command attempts to restore the target LBA's data. If the data cannot be restored, the target LBA is reassigned and written with a data pattern of all 00s. If the DRRT bit is one, no attempt is made to restore the target LBA.
- **FFMT** (Fast Format Enable) bit allows the formatting of the drive without any writes to the customer media. All format operations are allowed including changing block sizes and manipulating defects. The drive will operate normally after a fast format with the following caveat: since no data is written to any customer data blocks as a result of a Fast Format operation, there is a possibility that a read attempt to any particular block (without having previously written to that block) will result in an unrecoverable data error. This will most likely happen if the block size is changed as every LBA will contain data of an incorrect length and apparently an incorrect starting point. It is also possible to generate an uncorrectable data error without changing block sizes if the defect list is shortened and previously bad blocks become visible in the customer address space. Of course ALL DATA ON THE DRIVE WILL BE LOST as the result of any format operation and so any attempt to read blocks which have not been written to will result in unpredictable behavior.
- **FCERT** (Format Certification) bit determines whether the certification step will be performed during a Format Unit command. FCERT bit set to 0 disables certification. FCERT bit set to 1 enables the certification step.
- **CERTIFY_RDP_BIT** (RDP Certification) bit allows to enable certification after execute RDP command. CERTIFY_RDP_BIT set to 0 disables RDP certification. CERTIFY_RDP_BIT set to 1 enables RDP certification.

8.11.3 Mode Page 01 (Read/Write Error Recovery Parameters)

Table 142 Mode Page 01 (Read/Write Error Recovery Parameters)

Byte	Bit								Default
	7	6	5	4	3	2	1	0	
0	PS	0	Page Code = 01h						81h
1	Page Length = 0Ah								0Ah
2	AWRE	ARRE	TB	RC	EER=0	PER	DTE	DCR=0	C0h
3	Read Retry Count								01h
4	Obsolete = 0								00h
5	Obsolete = 0								00h
6	Obsolete = 0								00h
7	Reserved								00h
8	Write Retry Count								01h
9	Reserved								00h
10-11	(MSB) Recovery Time Limit (LSB)								00h

The Read-Write recovery parameters that will be used during any command that performs a read or write operation to the medium are as follows:

- **AWRE** Automatic Write Reallocation Enabled bit, set to zero indicates that the drive shall not perform automatic reallocation of defective data blocks during write operations. An AWRE bit set to one indicates that the drive shall perform automatic reallocation of defective data blocks during write operations.
- **ARRE** Automatic Read Reallocation Enabled bit, set to zero indicates that the drive shall not perform automatic reallocation of defective data blocks during read operations. ARRE bit set to one indicates that the drive shall perform automatic reallocation of defective data blocks during read operations.
- **TB** Transfer Block bit, set to one indicates that a data block that is not recovered within the recovery limits specified shall be transferred to the Initiator before *Check Condition* status is returned. A TB bit set to zero indicates that such a data block shall not be transferred to the Initiator. Data blocks that can be recovered within the recovery limits are always transferred regardless of the value of the bit.
- **RC** Read Continuous bit, set to one requests the Target to transfer the entire requested length of data without adding delays that would increase or ensure data integrity. This implies that the Target may send erroneous data. This bit has priority over all other error control bits (PER, DTE, DCR, TB). RC set to zero indicates normal interpretation of PER, DTE, DCR, and TB values. The RC bit setting is used by the Target when reporting errors associated with the transfer of the Initiator's data for the Read commands interpretation of PER, DTE, DCR, and TB values. The RC bit applies only to READ commands.

  Note: The Target implementation of the RC option is to disable error detection of the data fields but continue normal error detection and recovery for errors occurring in the servo field. If a servo field failure occurs, normal DRP could result in considerable recovery action, including proceeding through all levels of DRP.
- **EER** an Enable Early Recovery bit, **must be set to zero**, indicating that the drive shall use an error recovery procedure that minimizes the risk of misdetection or miscorrection during the data transfer. Data shall not be fabricated.
- **PER** Post Error bit, is set to one to indicate that the drive reports recovered errors.

- **DTE** (Data Terminate on Error) bit set to one specifies that data transfer will be halted when the first recovered error is encountered. PER must be set to one when DTE is set to one. DTE set to zero will cause data transfer to continue when recovered errors are encountered.
- **DCR** - Reserved
- **Read Retry Count** sets a limit on the amount of DRP passes in which the Target attempts to recover read errors. A value of zero disables all data recovery procedures. When AVERP bit (Mode Page 0 Byte 6 Bit 6) is zero, a value of non-zero in Read Retry Count enables all steps of DRP. When AVERP bit is one, the number in Read Retry Count sets the maximum retry count of DRP.
- **Write Retry Count** sets a limit on the amount of DRP passes in which the Target attempts to recover write errors. A value of zero disables all data recovery procedures.
- **Recovery Time Limit** indicates the period in 1 millisecond increments for the maximum recovery time of a single LBA. The value must be from 40 ms to 65535 ms (65.5 seconds).The granularity of the timer is 50ms. If an LBA is not able to be recovered within the limit, a Check Condition will be returned. The Recovery Time Limit will not be applied to Writes when WCE=1. A value of zero disables the timer.

The following summarizes valid modes of operation. If an illegal mode is set, the MODE SELECT command will complete successfully but the action of the drive when an error occurs is undefined.

Table 143 PERDTEDCRTB (1/2)

PER DTE TB	DESCRIPTION	
0 0 0	Retries and Error Correction are attempted. Recovered or corrected data (if any) or both are transferred with no *Check Condition* status at the end of the transfer.	
	no err	The transfer length is exhausted.
	soft err	The transfer length is exhausted. Transferred data includes blocks containing recovered errors.
	hard err	Data transfer stops when an unrecoverable error is encountered. The unrecoverable block is not transferred to the Initiator. The drive then creates the *Check Condition* status with the appropriate sense key.
0 0 1	Retries and Error Correction are attempted. Recovered or corrected data (if any) or both are transferred with no *Check Condition* status at the end of the transfer.	
	no err	The transfer length is exhausted.
	soft err	The transfer length is exhausted. Transferred data includes blocks containing recovered errors.
	hard err	Data transfer stops when an unrecoverable error is encountered. The unrecoverable block is transferred to the Initiator. The drive then creates the *Check Condition* status with the appropriate sense key.
0 1 0	Illegal Request-DTE must be zero when PER is zero.	
0 1 1	Illegal Request-DTE must be zero when PER is zero.	
1 0 0	The highest level error is reported at the end of transfer. Retries and error correction are attempted. Recovered or corrected data (if any) or both are transferred with *Check Condition* status and *Recovered Error* sense key set at the end of the transfer.	
	no err	The transfer length is exhausted.
	soft err	The transfer length is exhausted. Transferred data includes blocks containing recovered errors. The information byte in the sense data will contain the LBA of the last recovered error.
	hard err	Data transfer stops when an unrecoverable error is encountered. The unrecoverable block is not transferred to the Initiator. The drive then creates the *Check Condition* status with the appropriate sense key.

Table 144 PERDTEDCRTB (2/2)

PER DTE TB	DESCRIPTION	
1 0 1	The highest level error is reported at the end of transfer. Retries and error correction are attempted. Recovered or corrected data (if any) or both are transferred with *Check Condition* status and *Recovered Error* sense key set at the end of the transfer.	
	no err	The transfer length is exhausted.
	soft err	The transfer length is exhausted. Transferred data includes blocks containing recovered errors. The information byte in the sense data will contain the LBA of the last recovered error.
	hard err	Data transfer stops when an unrecoverable error is encountered. The unrecoverable block is not transferred to the Initiator. The drive then creates the *Check Condition* status with the appropriate sense key.
1 0 0	The highest level error is reported at the end of transfer. Retries are attempted but LDPC is not applied. Recovered or corrected data (if any) or both are transferred with *Check Condition* status and *Recovered Error* sense key set at the end of the transfer.	
	no err	The transfer length is exhausted.
	soft err	The transfer length is exhausted. Transferred data includes blocks containing recovered errors. The information byte in the sense data will contain the LBA of the last recovered error.
	hard err	Data transfer stops when an unrecoverable error is encountered. The unrecoverable block is not transferred to the Initiator. The drive then creates the *Check Condition* status with the appropriate sense key.
1 0 1	The highest level error is reported at the end of transfer. Retries and error correction are attempted. Recovered or corrected data (if any) or both are transferred with *Check Condition* status and *Recovered Error* sense key set at the end of the transfer.	
	no err	The transfer length is exhausted.
	soft err	The transfer stops on the first soft error detected. The information in the sense data shall contain the LBA of the block in error.
	hard err	Data transfer stops on the unrecoverable error. The unrecoverable error block is not returned to the Initiator. The drive then creates the *Check Condition* status with the appropriate sense key.
1 1 0	The highest level error is reported at the end of transfer. Retries and error correction are attempted. Recovered or corrected data (if any) or both are transferred with *Check Condition* status and *Recovered Error* sense key set at the end of the transfer.	
	no err	The transfer length is exhausted.
	soft err	The transfer stops on the first soft error detected. The information in the sense data shall contain the LBA of the block in error.
	hard err	Data transfer stops on the unrecoverable error. The unrecoverable error block is not returned to the Initiator. The drive then creates the *Check Condition* status with the appropriate sense key.

8.11.4 Mode Page 02 (Disconnect/Reconnect Parameters)

Table 145 Mode Page 02 (Disconnect/Reconnect Parameters)

Byte	Bit								Default
	7	6	5	4	3	2	1	0	
0	PS	0	Page Code = 02h						82h
1	Page Length = 0Eh								0Eh
2	Read Buffer Full Ratio								00h
3	Write Buffer Empty Ratio								00h
4-5	(MSB) Bus Inactivity Time Limit (LSB)								00h
6-7	Disconnect Time Limit = 0								00h
8-9	(MSB) Maximum Connect Time Limit (LSB)								00h
10-11	(MSB) Maximum Burst Size (LSB)								00A0h
12-13	Reserved = 0								00h
14-15	First Burst Size = 0								00h

The disconnect/reconnect page provides the Initiator with the means to tune the performance of the SAS Link.
The drive uses the disconnect/reconnect parameters to control when it attempts to regain control of the link during READ (operation code 08h and 28h) and WRITE (0Ah, 2Ah and 2E).

- **Read Buffer Full Ratio** is the numerator of a fraction whose denominator is 256. The fraction indicates how full the drive data buffer should be before attempting to re-arbitrate for the link. If the ratio is set to 0h, the target will calculate and use an optimal ratio based on the negotiated transfer rate.
- **Bus Inactivity Time Limit** specifies the maximum time that the SAS target port is permitted to maintain a connection without transferring a frame to the initiator port, specified in 100 microsecond increments. When this value is exceeded, the target port will prepare to close the connection by transmitting DONE.A value of zero indicates that there is no bus inactivity time limit.
- **Disconnect Time Limit** is not supported.
- **Write Buffer Empty Ratio** is the numerator of a fraction whose denominator is 256. The fraction indicates how empty the drive data buffer should be before attempting to re-arbitrate for the link. If the ratio is set to 0h, the target will calculate and use an optimal ratio based on the negotiated transfer rate. Both the Read Buffer Full Ratio and the Write Buffer Empty Ratio pertain to the current active notch. For each active notch as defined in page 0Ch there are separate Read Buffer Full Ratios and Write Buffer Empty Ratios. When the active notch is set to zero, the values are applied in mode page 0Ch across all notches.
- **Maximum Connect Time Limit** specifies the maximum amount of time the drive will keep a SAS connection open. The time is specified in 100 microsecond increments. The default value of zero indicates no time limit. A maximum value of FFFFh specifies a connection time limit of 6.55 seconds. When this time expires, the drive will prepare to close the connection.
- **Maximum Burst Size** field indicates the maximum amount of data that the target port shall transfer during a single data transfer operation. This value is expressed in increments of 512 bytes. A value of zero specifies there is no limit on the amount of data transferred per data transfer operation.
- **First Burst Size** is not supported.

8.11.5 Mode Page 03 (Format Device Parameters)

Table 146 Mode Page 03 (Format Device Parameters)

Byte	Bit								Default
	7	6	5	4	3	2	1	0	
0	PS	0	Page Code = 03h						03h
1	Page Length = 16h								16h
2-3	(MSB) Tracks per Zone (LSB)								xxh
									xxh
4-5	(MSB) Alternate Sectors per Zone = 0 (LSB)								00h
									00h
6-7	(MSB) Alternate Tracks per Zone = 0 (LSB)								00h
									00h
8-9	(MSB) Alternate Tracks per Logical Unit = 0 (LSB)								00h
									00h
10-11	(MSB) Sectors Per Track (LSB)								xxh
									xxh
12-13	(MSB) Data Bytes per Physical Sector (LSB)								xxh
									xxh
14-15	(MSB) Interleave = 0001h or 0000h (LSB)								00h
									01h
16-17	(MSB) Track Skew Factor (LSB)								xxh
									xxh
18-19	(MSB) Cylinder Skew Factor (LSB)								xxh
									xxh
20	SSEC	HSEC	RMB	SURF	RESERVED = 0				40h
21-23	Reserved = 0								00h

The format device page contains parameters that specify the medium format. This page contains no changeable parameters.

- **Tracks per Zone** specifies the number of tracks within the zone. This field is a function of the active notch.
- **Sectors per Track** specifies the number of physical sectors within each track. This field is a function of the active notch.
- **Data Bytes per Physical Sector** specifies the number of user data bytes per physical sector. The value depends upon the current formatted Block Length.
- **Interleave** value of 1 or 0 is valid. However, the drive will ignore this.
- **Track Skew Factor** indicates the number of physical sectors between the last block of one track and the first block on the next sequential track of the same cylinder. This field is a function of the active notch.
- **Cylinder Skew Factor** indicates the number of physical sectors between the last block of one cylinder and the first block on the next sequential cylinder. This field is a function of the active notch.
- **SSEC** = Zero indicates that the drive does not support soft sector formatting.

- **HSEC** = One indicates that the drive supports hard sector formatting.
- **RMB** = Zero indicates that the media does not support removable Fixed Disk.
- **SURF** = Zero indicates that progressive addresses are assigned to all logical blocks in a cylinder prior to allocating addresses within the next cylinder.

8.11.6 Mode Page 04 (Rigid Disk Drive Geometry Parameters)

Table 147 Mode Page 04 (Rigid Disk Drive Geometry Parameters)

Byte	Bit								Default
	7	6	5	4	3	2	1	0	
0	PS	0	Page Code = 04h						04h
1	Page Length = 16h								16h
2-4	(MSB) Number of Cylinders (LSB)								xxh
									xxh
5	Number of heads								xxh
6-8	(MSB) Starting Cylinder - Write Pre compensation = 0 (LSB)								00h
									00h
9-11	(MSB) Starting Cylinder - Reduced Write Current = 0 (LSB)								00h
									00h
12-13	(MSB) Drive Step Rate = 0 (Not used) (LSB)								00h
									00h
14-16	(MSB) Landing Zone Cylinder = 0 (Not used) (LSB)								00h
									00h
17	RESERVED = 0						RPL = 0		00h
18	Rotational Offset = 0 (Not used)								00h
19	RESERVED = 0								00h
20-21	(MSB) Medium Rotation Rate in RPM (LSB)								1Ch
									20h
22-23	Reserved = 0								00h

The rigid disk drive geometric page specifies various parameters for the drive.

- **RPL** = 0, Indicates that the drive does not support spindle synchronization.

8.11.7 Mode Page 07 (Verify Error Recovery Parameters)

Table 148 Mode Page 07 (Verify Error Recovery Parameters)

Byte	Bit								Default
	7	6	5	4	3	2	1	0	
0	PS	0	Page Code = 07h						87h
1	Page Length = 0Ah								0Ah
2	Reserved = 0				EER=0	PER	DTE	DCR=0	00h
3	Verify Retry Count								01h
4	Obsolete =0								00h
5 - 9	Reserved = 0								00h
10-11	(MSB) Verify Recovery Time Limit (LSB)								00h

The Verify recovery parameters are used by the Target when recovering from and reporting errors associated with the verification of the Initiator's Data for the following commands:

- **VERIFY**
- **WRITE AND VERIFY** - the verify portion of the command only.
- **EER** This bit is 0 since the Target does not support early recovery.
- **PER** (post error) bit is set to one to indicate that the drive reports recovered errors. The PER and DTE bit settings in mode page 7 override those of mode page 1 during VERIFY and the Verify portion of WRITE AND VERIFY.
- **DTE** (Data Terminate on Error) bit set to one specifies that data transfer will be halted when the first recovered error is encountered. PER must be set to one when DTE is set to one. DTE set to zero will cause data transfer to continue when recovered errors are encountered.
- **DCR -** Reserved
- **Verify Retry Count** sets a limit on the amount of verify recovery procedure (VRP) passes the Target attempts when recovering verify errors. The Verify Retry Count of one causes the Target to attempt up to one VRP pass per command when a medium error occurs during a verify operation. Only values of 0h and 01h are valid. The value of 0h disables all recovery.
- **Verify Recovery Time Limit** indicates the period in 1 millisecond increments for the maximum recovery time of a single LBA during the verify operation. The value must be from 40 ms to 65535 ms (65.5 seconds). The granularity of the timer is 50ms. If an LBA is not able to be recovered within the limit, a Check Condition will be returned.

8.11.8 Mode Page 08 (Caching Parameters)

Table 149 Page 08 (Caching Parameters)

Byte	Bit								Default
	7	6	5	4	3	2	1	0	
0	PS	0	Page Code = 08h						88h
1	Page Length = 12h								12h
2	IC	ABPF	CAP	DISC	SIZE	WCE	MF	RCD	04h
3	Demand Read Retention Priority				Write Retention Priority				00h
4-5	(MSB) Disable Pre-fetch Transfer Length (LSB)								FFh
6-7	(MSB) Minimum Pre-fetch (LSB)								00h
8-9	(MSB) Maximum Pre-fetch (LSB)								FFh
10-11	Maximum Pre-fetch Ceiling								FFh
12	FSW	LBCSS	DRA	Reserved = 0					00h
13	Number of Cache Segments								08h
14-15	(MSB) Cache Segment Size (LSB)								00h
16	Reserved = 0								00h
17-19	(MSB) Non Cache Segment Size (LSB)								00h

The caching parameters page defines parameters that affect the use of the cache.

- **IC**(Initiator Control) bit of one specifies that the drive will honor the following parameters to control cache segmentation and pre-fetch: SIZE, FSW, LBCSS, Number of Cache Segments, Cache Segment Size. The drive will never pre-fetch less data than specified by ABPF, MF, Demand Read Retention Priority, Write Retention Priority, Disable Pre-fetch Transfer Length, Minimum Pre-fetch, Maximum Pre-fetch, and Maximum Pre-fetch Ceiling, but may pre-fetch more based on internal cache algorithms. When the IC bit is set to zero, all the parameters listed above are ignored, and an internal caching algorithm is used.
- **ABPF** (Abort Pre-fetch) bit of one, with DRA set to zero, causes the drive to abort the pre-fetch upon receipt of a new command. ABPF set to one takes precedence over Minimum Pre-fetch. When ABPF is zero, with DRA set to zero, the termination of any active pre-fetch is dependent upon the other parameters in this page.
- **CAP** (Caching Analysis Permitted) is not supported and is ignored. The IC bit can be used to enable or disable adaptive caching.
- **DISC** (Discontinuity) is not supported and is ignored. Pre-fetch operations will continue across cylinders, within the limits of other caching parameters on this page.
- **SIZE** (Size Enable) bit when set to one indicates that the Cache Segment Size is to be used to control caching segmentation. When SIZE is set to zero, the Initiator requests that the Number of Cache Segments is to be used to control caching segmentation.
- **WCE** (Write Cache Enable) bit when set at zero indicates that the drive must issue *Good* status for WRITE (6) or WRITE (10) command only after successfully writing the data to the media. When the WCE bit is set to one,

the drive may issue *Good* status for a WRITE (6) or WRITE (10) command after successfully receiving the data but before writing it to the media. When WCE = 1, the drive operates as if AWRE = 1.

Note: When WCE = 1, a SYNCHRONIZE CACHE command must be done to ensure data are written to the media before powering down the Target.

***WCD** (Write Cache Disable) bit when set at zero treats that the drive Write Cache Enable.*

- **MF** (Multiplication Factor) bit determines how the Maximum and Minimum Pre-fetch parameters are interpreted. If this bit is set to zero, the parameters are used as is. If the bit is set to one, the parameters are multiplied by the number of blocks requested in the Read Command.
- **RCD** (Read Cache Disable) bit set at zero indicates that the drive may return some or all of the data requested by a READ (6) or READ (10) command by accessing the data buffer, not the media. An RCD bit set at one indicates that the Target does not return any of the data requested by a READ (6) or READ (10) command by accessing the data buffer. All of the data requested is read from the media instead.
- **Demand Read Retention Priority** is not supported.
- **Write Retention Priority** is not supported.
- **Disable Pre-fetch Transfer Length** is used to prevent read-ahead after Read commands that are longer than the specified number of blocks. If this parameter is set to zero, a read-ahead is not performed.
- **Minimum Pre-fetch** specifies the minimum number of LBAs that the drive should after each READ command. A value of zero indicates that read ahead should be terminated immediately after a new command arrives, except when the new command is on the current head and track.
- **Maximum Pre-fetch** specifies the maximum number of LBAs to read ahead after a Read command.
- **Maximum Pre-fetch Ceiling** specifies the maximum number of blocks the drive should attempt to read ahead. This field is ignored.
- **FSW** (Force Sequential Write) is not supported and is ignored. All logical blocks will be written in sequential order.
- **LBCSS** (Logical Block Cache Segment Size) bit when set to one indicates that the Cache Segment Size field units shall be interpreted as logical blocks. When it is set to zero, the Cache Segment Size field units shall be interpreted as bytes.
- **DRA** (Disable Read Ahead) bit when set to one request that the Target not read into the buffer any logical block beyond the addressed logical block(s). When it is set at zero, the Target may continue to read logical blocks into the buffer beyond the addressed logical block(s).
- **Number of Cache Segments** field is used to select the number of data buffer cache segments. This parameter is valid only when the SIZE bit is set at zero. It is ignored when SIZE is set at one.
- **Cache Segment Size** field indicates the requested segment size in Bytes or Blocks, depending upon the value of the LBCSS bit. The Cache Segment Size field is valid only when the SIZE bit is one. It is ignored when SIZE is set at zero.
- **Non Cache Segment Size** is not supported and is ignored.

8.11.9 Mode Page 0A (Control Mode Page Parameters)

Table 150 Page 0A (Control Mode Page Parameters)

Byte	Bit								Default
	7	6	5	4	3	2	1	0	
0	PS	0	Page Code = 0Ah						8Ah
1	Page Length = 0Ah								0Ah
2	TST=0			TMFonly=0	DPICZ	D_Sense	GLTSD=0	RLEC=0	04h
3	Queue Algorithm Modifier				Rsvd=0	QErr		DQue	00h
4	RSVD=0	RAC=0	UA_INTLCK_CTRL=0		SWP=0	Obsolete			00h
5	ATO	TAS=0	ATMPE	RWWP	Rsvd=0	Obsolete			00h
6-7	Obsolete=0								00h
8-9	(MSB) Busy Timeout Period(LSB)								00h
10-11	(MSB)Extended Self-test Routine Completion Time(LSB)								XXh

Following are parameter options for Page 0A.

The Descriptor Sense Data (D_SENSE) bit controls the format in which the drive returns sense data for CHECK_CONDITION status:

- Setting the D_SENSE bit to 0 specifies that the drive shall return fixed format sense data for CHECK_CONDITION.
- Setting the D_SENSE bit to 1 specifies that the drive shall return descriptor format sense data for CHECK_CONDITION

- **DPICZ** (Disable Protection Information Check if protect field is Zero) bit set to zero indicates that checking of protection information bytes is enabled. A DPICZ bit set to one indicates that checking of protection information is disabled on commands with:
  a) The RDPROTECT field (see SBC-3) set to zero;
  b) The VRPROTECT field (see SBC-3) set to zero; or
  c) The ORPROTECT field (see SBC-3) set to zero.
- **Queue algorithm modifier** specifies restrictions on the algorithm used for reordering commands that are tagged with the SIMPLE message.
  0h: Restricted reordering. The Target shall reorder the actual execution sequence of the queued commands from each Initiator such that data integrity is maintained for that Initiator.
  1h: Unrestricted reordering allowed. The Target may reorder the actual execution sequence of the queued commands in any manner it selects. Any data integrity exposures related to command sequence order are explicitly handled by the Initiator through the selection of appropriate commands and queue tag messages.
  2h-7h: RESERVED.
  8: Command reordering is disabled
  9-Fh: RESERVED
- **QErr** (Queue Error Management) The queue error management (QERR) field specifies how the drive shall handle blocked tasks when another task receives a *Check Condition* status.

Table 151 Queue Error Management (QERR) field

QERR value	Description
00b	Specifies that all tasks from all Initiators are blocked from execution when a Continent Allegiance (CA condition) is pending. Those blocked tasks are allowed to resume execution in a normal fashion after the CA condition is cleared.
01b	Specifies that all tasks from all Initiators are aborted when the Target returns *Check Condition* status. A unit attention condition will be generated for each Initiator that had commands in the queue except for the Initiator that received the *Check Condition* status. The sense key will be set to *Unit Attention* and the additional sense code will be set to *Commands Cleared by Another Initiator*.
10b	Reserved
11b	Blocked tasks in the task set belonging to the Initiator to which a *Check Condition* status is sent shall be aborted when the status is sent.

- **DQue** (Disable Queuing) bit set at zero specifies that tagged queuing shall be enabled if the Target supports tagged queuing. A DQue bit set at one specifies that tagged queuing shall be disabled. Command queuing is always enabled on the drive, therefore this bit is ignored.
- **ATO** (Application Tag Owner) bit set to one specifies that the contents of the Logical Block Application Tag field in the protection information, if any, shall not be modified by the drive. An ATO bit set to zero specifies that the contents of the Logical Block Application Tag field in the protection information, if any, may be modified by the drive. If the ATO bit is set to zero, the drive will ignore the contents of the Logical Block Application Tag field in the protection information.
- **ATMPE** (Application Tag Mode Page Enabled) bit set to zero specifies that the Application Tag mode page (see SBC-3) is disabled and the contents of logical block application tags are not defined by this specification. An ATMPE bit set to one specifies that the Application Tag mode page is enabled.
  If:
  a. the ATMPE is set to one;
  b. the ATO bit is set to one;
  c. the value in the DPICZ bit allows protection information checking for the specified command; and
  d. the APP_CHK bit is set to one in the Extended Inquiry VPD page;

then:

knowledge of the value of the Application Tag shall come from the values in the Application Tag mode page as specified by the DPICZ bit.

- **RWWP**(Reject Write Without Protection) bit set to zero specifies that write commands without protection information(see SBC-3) shall be processed. A RWWP bit set to one specifies that write commands without protection information received by a drive that has been formatted with protection information shall be terminated with CHECK CONDITION status with the sense key set to ILLEGAL REQUEST and the additional sense code set to INVALID FIELD IN CDB
- **Busy Timeout Period** is ignored

- **Extended Self-test Routine Completion Time** specifies the time in seconds that the device server requires to complete an extended self-test provided the device server is not interrupted by subsequent commands and no errors occur during processing of the self-test. A value of FFFFh indicates that the extended self-test takes 65,535 seconds or longer. See also the EXTENDED SELF-TEST COMPLETION MINUTES field in the Extended INQUIRY Data VPD page.

8.11.9.1 Control Extension Subpage 01h

Table 152 Control Extension Subpage

Byte	Bit								Default
	7	6	5	4	3	2	1	0	
0	PS	SPF=1	Page Code = 0Ah						CAh
1	Subpage Code = 1								01h
2-3	Page Length = 001Ch								001Ch
4	Reserved = 0					TCMOS=0	SCSIP=1	IALUAE = 0	00h
5	Reserved = 0				Initial Priority = 0				00h
6	Maximum Sense Data Length								00h
7-31	Reserved = 0								00h

- **TCMOS (Timestamp Changeable By Methods Outside This Specification):** set to zero to specify that the timestamp shall not be changed by any method except those defined by this specification.
- **SCSIP (SCSI Precedence):** set to one to specify that the timestamp changed using a SET TIMESTAMP command shall take precedence over any other methods.
- **IALUAE (Implicit Asymmetric Logical Unit Access Enabled):** set to zero to specify that implicitly managed transitions between primary target port asymmetric access states are disallowed and indicates that implicitly managed transitions between primary target port asymmetric access states are disallowed or not supported.
- **Initial Command Priority:** set to zero to indicate that the drive does not support priorities with the SET PRIORITY command.
- **Maximum Sense Data Length:** specifies the maximum number of bytes of sense data the drive shall return in the same I_T_L_Q nexus transaction as the status. A Maximum Sense Data Length field set to zero specifies that there is no limit. The drive shall not return more sense data bytes in the same I_T_L_Q nexus transaction as the status than the smaller of the length indicated by the:
  a) Maximum Sense Data length field; and
  b) Maximum Supported Sense Data Length field in the Extended INQUIRY VPD page.

8.11.9.2 Control Extension Subpage 02h

Table 153 Application Tag mode page:

Byte	Bit							
	7	6	5	4	3	2	1	0
0	PS	SPF=1	Page Code = 0Ah					
1	Subpage Code = 02h							
2-3	Page Length = n-4							
4-15	Reserved = 0							
16-39	Application Tag descriptor [first]							
...	...							
(n-24)-n	Application Tag descriptor [last]							

Table 154 Application Tag descriptor format

Byte	Bit							
	7	6	5	4	3	2	1	0
0	Last	Reserved = 0						
1-5	Reserved = 0							
6-7	Logical Block Application Tag							
8-15	Logical Block Address							
16-23	Logical Block Count							

- A **LAST** bit set to one specifies that this Application Tag descriptor is the last valid Application Tag descriptor in the Application Tag mode page. A LAST bit set to zero specifies that the Application Tag descriptor is not the last valid Application Tag descriptor in the Application Tag mode page.
- The **LOGICAL BLOCK APPLICATION TAG** field specifies the value to be compared with the LOGICAL LOCK APPLICATION TAG field associated with data read or written to the LBA.
- The **LOGICAL BLOCK ADDRESS** field contains the starting LBA for this Application Tag descriptor. The LOGICAL BLOCK ADDRESS field in the first Application Tag descriptor shall be set to 0000_0000_0000_0000h. For subsequent Application Tag descriptors, the contents of the LOGICAL BLOCK ADDRESS field shall contain the sum of the values in:
  a) The LOGICAL BLOCK ADDRESS field in the previous Application Tag descriptor; and
  b) The LOGICAL BLOCK COUNT field in the previous Application Tag descriptor.

The sum of the LOGICAL BLOCK ADDRESS field in the Application Tag descriptor with the LAST bit set to one and the LOGICAL BLOCK COUNT field in the Application Tag descriptor with the LAST bit set to one shall equal the RETURNED LOGICAL BLOCK ADDRESS field in the READ CAPACITY (16) parameter data (see 8.24 “READ CAPACITY (16) (9E/10)”).

If an invalid combination of the LAST bit, LOGICAL BLOCK APPLICATION TAG field, and LOGICAL BLOCK ADDRESS field are sent by the application client, then the drive shall terminate the MODE SELECT command (see 8.9) with CHECK CONDITION status with the sense key set to ILLEGAL REQUEST and the additional sense code set to INVALID FIELD IN PARAMETER LIST.

- The **LOGICAL BLOCK COUNT** field specifies the number of logical blocks to which this Application Tag descriptor applies.
- A LOGICAL BLOCK COUNT field set to 0000_0000_0000_0000h specifies that this Application Tag descriptors hall be ignored.

8.11.10 Mode Page 0C (Notch Parameters)

Table 155 Page 0C (Notch Parameters)

Byte	Bit								Default
	7	6	5	4	3	2	1	0	
0	PS	0	Page Code = 0Ch						8Ch
1	Page Length = 16h								16h
2	ND=1	LPN=0	Reserved = 0						80h
3	Reserved = 0								00h
4-5	(MSB) Maximum Number of Notches							(LSB)	XXh XXh
6-7	(MSB) Active Notch							(LSB)	00h 00h
8-11	(MSB) Starting Boundary							(LSB)	XXh XXh
12-15	(MSB) Ending Boundary							(LSB)	XXh XXh
16-23	(MSB) Pages Notched							(LSB)	0000h 0000h 0000h 100Ch

The notch page contains parameters for direct-access devices that implement a variable number of blocks per cylinder. Each section of the logical unit with a different number of blocks per cylinder is referred as a notch. The only field that is changeable is the **Active Notch** field.

- **ND** = One meaning that this device is a notched drive.
- **LPN** = Zero meaning that the notches are based upon physical parameters of the drive (cylinder #), not logical parameters.
- **Maximum Number of Notches** is the number of notches the drive can support. This value is drive model dependent.
- **Active Notch** indicates to which notch subsequent MODE SELECT/SENSE command parameters pertain. A value of 0 is used for parameter values which apply to all notches. Values from 1 to the maximum value depending on the model specify the notch number, where notch 1 is the outermost notch. Following mode parameters are based on the current active notch:
- **Mode Page 2**
  - Read Buffer Full Ratio
  - Write Buffer Empty Ratio

- **Mode Page 3**
  - Alternate Sector per Zone
  - Alternate Track per Zone
  - Alternate Track per Logical Unit
  - Sector per Track
  - Track Skew Factor
  - Cylinder Skew Factor
- **Starting Boundary** contains the first physical location of the active notch. The first three bytes are the cylinder number and the last byte is the head. The value sent in this field is ignored.
- **Ending Boundary** contains the last physical location of the active notch. The first three bytes are the cylinder number and the last byte is the head. The value sent in this field is ignored.
- **Pages Notched** is a bit map of the mode page codes that indicates which pages contain parameters that may be different for different notches. The most significant bit of this field corresponds to page code 3Fh and the least significant bit corresponds to page code 00h. If a bit is one, then the corresponding mode page contains parameters that may be different for different notches. If a bit is zero, then the corresponding mode page contains parameters that are constant for all notches.

8.11.11 Mode Page 18h

Table 156 Page 18h (Protocol-Specific Logical Unit mode page)

Byte	Bit								Default
	7	6	5	4	3	2	1	0	
0	PS=0	SPF=0	Page Code = 18h						18h
1	Page Length = 6h								6h
2	Reserved		Transport Layer Retries=0			Protocol Identifier = 6h			6h
3	Reserved = 0								00h
4-7	Reserved								00h

This page defined protocol-specific parameters that affect the logical unit.

- Transport Layer Retries is unchangeable and set to zero. The drive does not support Transport Layer Retries as defined in SAS 1.1.

8.11.12 Mode Page 19h (Port Control Parameters)

The Protocol-Specific Port mode page contains parameters that affect SSP target port operation. There is one copy of the mode page shared by all SSP initiator ports.

8.11.12.1 Short Format of Port Control Page

Table 157 Short (Port Control Parameters) Format

Byte	Bit								Default
	7	6	5	4	3	2	1	0	
0	PS	SPF=0	Page Code = 19h						99h
1	Page Length = 0Eh								0Eh
2	Reserved	Continue AWT	Broadcast Asynchronous Event	Ready LED Meaning	Protocol Identifier = 6h				06h
3	Reserved								00h
4-5	(MSB) I_T NEXUS LOSS TIMER (LSB)								07h-D0h
6-7	(MSB) INITIATOR RESPONSE TIMEOUT (LSB)								07h-D0h
8-9	(MSB) REJECT TO OPEN LIMIT (LSB)								0000h
10-15	Reserved								00h

- The Parameters Savable (PS) bit is set to one, indicating the parameters are savable.
- The **SPF** field shall be set to zero for access to the short format mode page.
- **Protocol Identifier** has a value of 6h indicating this is a SAS SSP specific mode page.
- **A CONTINUE AWT** bit set to one specifies that the SAS port shall not stop the Arbitration Wait Time timer and set the Arbitration Wait Time timer to zero when the SAS port receives an OPEN_REJECT (RETRY). A CONTINUE AWT bit set to zero specifies that the SAS port shall stop the Arbitration Wait Time timer and set the Arbitration Wait Time timer to zero when it receives an OPEN_REJECT (RETRY).
- **A BROADCAST ASYNCHRONOUS EVENT** bit set to one specifies that the drive shall enable origination of Broadcast (Asynchronous Event). A BROADCAST ASYNCHRONOUS EVENT bit set to zero specifies that the drive shall disable origination of Broadcast (Asynchronous Event).
- **Ready LED Meaning** specifies the READY LED signal behavior. In general, when the bit is 0, and the drive is in a ready state, the LED is usually on, but flashes on and off when commands are processed. When the bit is 1, the LED is usually off, but flashes on and off when commands are processed. For additional implementation specifics, see the SAS 3 draft standard.
- The **I_T NEXUS LOSS TIME** field contains the time (in milliseconds) that our SSP target port shall retry connection requests to an SSP initiator port that are rejected with responses indicating the SSP initiator port may no longer be present before recognizing an I_T nexus loss. A value of 0 indicates a vendor specific amount of time and defaults to a 2 second time period. A value of FFFFh indicates an unlimited period. The default value of 7D0h specifies a 2 second time period.
- **INITIATOR RESPONSE TIMEOUT** field contains the time in milliseconds that the SSP target port shall wait for the receipt of a Data frame after sending the XFER_RDY frame requesting data. When the INITIATOR RESPONSE TIMEOUT expires, the associated command will be aborted. An INITIATOR RESPONSE TIMEOUT field value of zero indicates that the SSP target port shall disable the timer. This value is enforced by the transport layer. The default value of 7D0h specifies a 2 second time period.

- **The REJECT TO OPEN LIMIT** field contains the minimum time in 10 µs increments that the target port shall wait to establish a connection request with an initiator port on an I_T nexus after receiving an OPEN_REJECT (RETRY), OPEN_REJECT (CONTINUE 0), or OPEN_REJECT (CONTINUE 1). This value may be rounded as defined in SPC-4. A REJECT TO OPEN LIMIT field set to 0000h indicates that the minimum time is vendor specific. This minimum time is enforced by the transport layer.

8.11.12.2 Long Format of Port Control Page

Table 158 Long Format of Port Control Page

Byte	Bit								Default
	7	6	5	4	3	2	1	0	
0	PS	SPF=1	Page Code = 19h						D9h
1	Subpage Code								...
2-3	(MSB) Page Length (n-3) (LSB)								0000h
4	RSVD								00h
5	RSVD				Protocol Identifier = 6h				06h
6	Protocol Specific Mode Parameters								...
n									...

The drive maintains an independent set of port control mode page parameters for each SAS initiator port.

- The **SPF** field shall be set to one for access to the long format mode page.
- **Subpage Code** indicates which subpage is being accessed. The drive support the following subpage codes. If the Subpage Code is not supported, the drive returns a CHECK CONDITION status, the sense key is set to ILLEGAL REQUEST and the additional sense code set to ILLEGAL FIELD IN PARAMETER LIST.
  - 01h: PHY Control and Discover Subpage
  - 02h: Shared Port Control subpage
  - FFh: All supported subpages.
- **Page Length** specifies the length in bytes of the subpage parameters after the Page Length.
- **Protocol Identifier** has a value of 6h indicating this is a SAS SSP specific mode page.

8.11.12.3 PHY Control and Discover (Subpage 1)

Table 159 PHY Control and Discover (Subpage 1)

Byte	Bit								Default
	7	6	5	4	3	2	1	0	
0	PS	SPF=1	Page Code = 19h						D9h
1	Subpage Code = 1								01h
2-3	(MSB) Page Length = 0064h (LSB)								0064h
4	Reserved								00h
5	Reserved				Protocol Identifier = 6h				06h
6	Generation Code								00h
7	Number of PHYS = 2								02h
8-55	SAS PHY Mode Descriptor 0								...
56-103	SAS PHY Mode Descriptor 1								...

The Phy Control and Discover subpage contains phy-specific parameters. MODE SENSE command returns the current settings for the initiator.

- **Protocol Identifier** has a value of 6h indicating this is a SAS SSP specific mode page.
- **The GENERATION CODE field** is a one-byte counter that shall be incremented by one by the drive every time the values in this mode page or the SAS-3 Phy mode page field values are changed. A GENERATION CODE field set to 00h indicates the generation code is unknown. The drive shall wrap this field to 01h as the next increment after reaching its maximum value (i.e., FFh). The GENERATION CODE field is also contained in the Protocol-Specific Port log page and may be used to correlate phy settings across mode page and log page accesses.
- **Number of PHYS** field is set to 2, to represent the dual ported drive (one PHY per port)
- The **SAS PHY Mode Descriptor** Fields are defined in Table 160. There are two SAS PHY Mode Descriptor fields, one per port.

Table 160 SAS PHY Mode Descriptor

Byte	Bit							
	7	6	5	4	3	2	1	0
0	Reserved							
1	PHY IDENTIFIER							
2-3	(MSB) Reserved (LSB)							
4	Reserved	ATTCHED DEVICE TYPE			ATTCHED REASON			
5	Reason				Negotiated Logical Link Rate			
6	Reserved				ATTACHED SSP INITIATOR PORT	ATTACHED STP INITIATOR PORT	ATTACHED SMP INITIATOR PORT	Reserved
7	Reserved				ATTACHED SSP TARGET PORT	ATTACHED STP TARGET PORT	ATTACHED STP TARGET PORT	Reserved
8-15	(MSB) SAS ADDRESS (LSB)							
16-23	(MSB) ATTACHED SAS ADDRESS (LSB)							
24	ATTACHED PHY IDENTIFIER							
25	Attached Persistent Capable	Attached Power Capable		Attached Slumber Capable	Attached Partial Capable	Attached Inside ZPSDS Persistent	Attached Requested Inside ZPSDS	Attached Break_Reply Capable
26-31	(MSB) Reserved (LSB)							
32	PROGRAMMED MINIMUM PHYSICAL LINK RATE				HARDWARE MINIMUM PHYSICAL LINK RATE			
33	PROGRAMMED MAXIMUM PHYSICAL LINK RATE				HARDWARE MAXIMUM PHYSICAL LINK RATE			
34-41	(MSB) Reserved (LSB)							
42-43	(MSB) Vendor specific (LSB)							
44-47	(MSB) Reserved (LSB)							

- **PHY Identifier:** Unique PHY Identifier for the PHY associated with the other data in this SAS PHY Mode Descriptor Page.
- **Attached Reason:** indicates the value of the REASON field in the last received IDENTIFY address frame associated with the PHY Identifier list in this SAS PHY Mode Descriptor.
- **Attached Device Type:** indicated the value of the DEVICE TYPE field in the last received IDENTIFY address frame associated with the PHY Identifier listed in this SAS PHY Mode Descriptor.
- **Attached SAS Address:** indicates the value of the attached SAS address in the last received IDENTIFY address frame associated with the PHY Identifier list in this SAS PHY Mode Descriptor..
- **Attached PHY Identifier:** indicated the value of the attached PHY Identifier field in the last received IDENTIFY address frame associated with the PHY Identifier listed in this SAS PHY Mode Descriptor.
- **SAS Address:** Unique Port Identifier for the Port associated with the PHY Identifier listed in this SAS PHY Mode Descriptor
- **Hardware Minimum Physical Link Rate:** Minimum link rate supported by the Port associated with the PHY Identifier listed in this SAS PHY Mode Descriptor.
- **Hardware Maximum Physical Link Rate:** Maximum link rate supported by the Port associated with the PHY Identifier listed in this SAS PHY Mode Descriptor.
- **Programmed Minimum Physical Link Rate:** Current minimum link rate used during speed negotiation by the Port associated with the PHY Identifier listed in this SAS PHY Mode Descriptor.
- **Programmed Maximum Physical Link Rate:** Current maximum link rate used during speed negotiation by the Port associated with the PHY Identifier listed in this SAS PHY Mode Descriptor.
- **Attached Persistent Capable** indicates the value of the PERSISTENT CAPABLE field in the last received IDENTIFY address frame associated with the PHY Identifier listed in this SAS PHY Mode Descriptor. See Table 29.
- **Attached Power Capable** indicates the value of the POWER CAPABLE field in the last received IDENTIFY address frame associated with the PHY Identifier listed in this SAS PHY Mode Descriptor. See Table 29.
- **Attached Slumber Capable** indicates the value of the SLUMBER CAPABLE field in the last received IDENTIFY address frame associated with the PHY Identifier listed in this SAS PHY Mode Descriptor. See Table 29.
- **Attached Partial Capable** indicates the value of the PARTIAL CAPABLE field in the last received IDENTIFY address frame associated with the PHY Identifier listed in this SAS PHY Mode Descriptor. See Table 29.
- **Attached Inside ZPSDS Persistent** indicates the value of the INSIDE ZPSDS PERSISTENT field in the last received IDENTIFY address frame associated with the PHY Identifier listed in this SAS PHY Mode Descriptor. See Table 29.
- **Attached Requested Inside ZPSDS** indicates the value of the REQUESTED INSIDE ZPSDS field in the last received IDENTIFY address frame associated with the PHY Identifier listed in this SAS PHY Mode Descriptor. See Table 29.
- **Attached Break_Reply Capable** indicates the value of the BREAK_REPLY CAPABLE field in the last received IDENTIFY address frame associated with the PHY Identifier listed in this SAS PHY Mode Descriptor. See Table 29.

8.11.12.4 Shared Port Control (Subpage 2)

Table 161 Shared Port Control (Subpage 2)

Byte	Bit								Default
	7	6	5	4	3	2	1	0	
0	PS	SPF=1	Page Code = 19h						D9h
1	Subpage Code = 2								02h
2 - 3	Page Length = 000Ch								000Ch
4	Reserved = 0								00h
5	Reserved = 0				Protocol Identifier = 6				06h
6 - 7	Power Loss Timeout								0000h
8	Reserved								00h
9	Power Grant Timeout								0000h
10-15	Reserved								00h

- **Power Loss Timeout** is the maximum time, in one millisecond increments, that the drive port will respond to connection requests with OPEN_REJECT(RETRY) after receiving NOTIFY(POWER LOSS EXPECTED).The Power Loss Timeout will be restarted after each NOTIFY(POWER LOSS EXPECTED) that is received. A POWER LOSS TIMEOUT field set to 0000h specifies that the maximum time is vendor-specific and automatically defaults to 2 seconds.

- **Power Grant Timeout** is the minimum time, in one second increments, that the drive shall wait to receive a PWR_GRANT from a power source device. A POWER GRANT TIMEOUT field set to 0000h specifies that the minimum time limit is vendor-specific and defaults to 75 seconds.

8.11.12.5 Enhanced PHY Control Mode Page (Subpage 3)

Table 162 Subpage 3

Byte	Bit								Default
	7	6	5	4	3	2	1	0	
0	PS	SPF=1	Page Code 19h						D9h
1	Subpage Code = 3								03h
2-3	Page Length = 002Ch								002Ch
4	Reserved = 00h								00h
5	Reserved = 0				Protocol Identifier = 6				06h
6	Generation Code								00h
7	Number of Phys = 02h								02h
8-27	SAS PHY Mode Descriptor 0								--
28-47	SAS PHY Mode Descriptor 1								--

- **The GENERATION CODE field** is a one-byte counter that shall be incremented by one by the device server every time the values in this mode page or the SAS PHY mode page field values are changed. A GENERATION CODE field set to 00h indicates the generation code is unknown. The device server shall wrap this field to 01h as the next increment after reaching its maximum value (i.e., FFh). The GENERATION CODE field is also contained in the Protocol-Specific Port log page and may be used to correlate PHY settings across mode page and log page accesses.

Table 163 PHY Mode Descriptor (0 and 1)

Byte	Bit							
	7	6	5	4	3	2	1	0
0	Reserved							
1	PHY Identifier							
2-3	Descriptor Length (0010h)							
4-7	Programmed PHY Capabilities							
8-11	Current PHY Capabilities							
12-15	Attached PHY Capabilities							
16-17	**Reserved**							
18	Reserved			Negotiated SSC	Negotiated Physical Link Rate			
19	Reserved					Enable Slumber=1	Enable Partial=1	Hardware Mixing Supported='0'

- Phy Capabilities are defined under the "SAS Speed Negotiation"

8.11.13 Mode Page 1A (Power Control)

Table 164 Page 1A (Power Control)

Byte	Bit								Default
	7	6	5	4	3	2	1	0	
0	PS	SPF (0b)	Page Code = 1Ah						9Ah
1	Page Length = 26h								26h
2	PM_BG_PRECEDENCE		Reserved = 0					Standby_Y	00h
3	Reserved = 0				Idle_C	Idle_B	Idle_A	Standby_Z	06h
4-7	Idle_A Condition Timer								14h
8-11	Standby_Z Condition Timer								00h
12-15	Idle_B Condition Timer								1770h
16-19	Idle_C Condition Timer								00h
20-23	Standby_Y Condition Timer								00h
24-38	Reserved								00h
39	CCF_IDLE		CCF_STANDBY		CCF_STOPPED		Reserved		58h

- **If the STANDBY_Y bit** is set to one, then the standby_y condition timer is enabled. If the STANDBY_Y bit is set to zero, then the device shall ignore the standby_y condition timer.
- **If the IDLE_C bit** is set to one, then the idle_c condition timer is enabled. If the IDLE_C bit is set to zero, then the device shall ignore the idle_c condition timer.
- **If the IDLE_B bit** is set to one, then the idle_b condition timer is enabled. If the IDLE_B bit is set to zero, then the device shall ignore the idle_b condition timer.
- **If the IDLE_A bit** is set to one, then the idle_a condition timer is enabled. If the IDLE_A bit is set to zero, then the device shall ignore the idle_a condition timer.
- **If the STANDBY_Z bit** is set to one, then the standby_z condition timer is enabled. If the STANDBY_Z bit is set to zero, then the device shall ignore the standby_z condition timer.
- **The IDLE_A Condition Timer** field specifies the initial value, in 100 millisecond increments, for the idle_a power condition timer. The minimum allowable inactivity time for idle_a is 1 second. Any value less than this is accepted, but will automatically default to 1 second.
- **The STANDBY_Z Condition Timer** field specifies the initial value, in 100 millisecond increments, for the standby_z power condition timer. The minimum allowable inactivity time for standby_z is 2 minutes. Any value less than this is accepted, but will automatically default to two minutes. In addition, a limit of 60 timer initiated head unloads per 24 hour period is enforced.
- **The IDLE_B Condition Timer** field specifies the initial value, in 100 millisecond increments, for the idle_b power condition timer. The minimum allowable inactivity time for idle_b is 2 minutes. Any value less than this is accepted, but will automatically default to two minutes. In addition, a limit 60 timer initiated head unloads per 24 hour period is enforced.
- **The IDLE_C Condition** Timer field specifies the initial value, in 100 millisecond increments, for the idle_c power condition timer. The minimum allowable inactivity time for idle_c is 2 minutes. Any value less than this is accepted, but will automatically default to two minutes. In addition, a limit of 60 timer initiated head unloads per 24 hour period is enforced.
- **The STANDBY_Y Condition Timer** field specifies the initial value, in 100 millisecond increments, for the standby_y power condition timer. The minimum allowable inactivity time for standby_y is 2 minutes. Any value less than this is accepted, but will automatically default to two minutes. In addition, a limit60 timer initiated head unloads per 24 hour period is enforced.
- The **PM_BG_PRECEDENCE** field (see Table 165) specifies the interactions between background functions and power management
- **CCF Idle** CHECK CONDITION if from idle, 00b: restricted. 01b Returning CHECK CONDITION status if transition

was from an idle power condition is disabled. 10b: Returning CHECK CONDITION status if transition was from an idle power condition is enable, 11b: reserved.

- **CCF Standby** CHECK CONDITION if standby, 00b: restricted. 01b: Returning CHECK CONDITION status if transition was from a standby power condition is disabled. 10b: Returning CHECK CONDITION status if transition was from a standby power condition is enabled, 11b: reserved
- **CCF Stopped** CHECK CONDITION if stopped, 00b: restricted. 01b: Returning CHECK CONDITION status if transition was from a stopped power condition is disabled. 10b: Returning CHECK CONDITION status if transition was from a stopped power condition is enabled, 11b: reserved

Table 165 PM_BG_PRECEDENCE field

Code	Vendor Specific
00h	Vendor Specific – Background operations take precedence over maintaining low power conditions (same as 01b)
01b	Performing background functions take precedence over maintaining low power conditions as follows: a) if the logical unit is in a low power condition as the result of a power condition timer associated with that condition expiring, then: 1) the logical unit shall change from that power condition, if necessary, to the power condition required to perform the background function, when: a) a timer associated with a background scan operation expires, and that function is enabled or b) an event occurs to initiate a device specific background function, and that function is enabled; 2) the logical unit shall perform the background function(s) based on the definitions in this specification and other command standards (e.g., if the drive receives a command while performing a background function, then the logical unit shall suspend the function to process the command); 3) if more than one condition is met to initiate a background function, then: a) all initiated background functions shall be performed; and b) the order of performing the functions is vendor specific; and 4) when all initiated background functions have been completed, the drive shall check to see if any power condition timers have expired. If any power condition timer has expired, then the logical unit shall change to the power condition associated with the highest priority timer that has expired; or b) if the logical unit is performing a background function, and a power condition timer expires, then the logical unit shall perform all initiated background functions before the logical unit changes to a power condition associated with a timer has expired
10b	Maintaining low power conditions take precedence over performing background functions as follows: a) if the logical unit is in a low power condition, then the logical unit shall not change from that power condition to perform a background function; b) the drive may perform any initiated and enabled background function based on the definitions in this specification or other command standards, if all of the following are true: A) a condition is met to initiate a background function; B) that background function is enabled; C) the logical unit changes to a power condition in which the background function may be performed (e.g., the drive processes a medium access command causing the logical unit to change its power condition to continue processing that command); and D) all outstanding application client requests have been completed; or c) if the logical unit is performing a background function, and a power condition timer expires that causes a change to a power condition in which the logical unit is unable to continue performing the background function, then the logical unit shall: A) suspend the background function; and B) change to the power condition associated with the timer that expired.
11b	Reserved = 0

8.11.14 Mode Page 1C (Informational Exceptions Control)

Table 166 Page 1C (Informational Exceptions Control)

Byte	Bit								Default
	7	6	5	4	3	2	1	0	
0	PS	0	Page Code = 1Ch						9Ch
1	Page Length = 0Ah								0Ah
2	PERF	RSVD	EBF	EWASC	DEXCPT	TEST	EBACK ERR	LOGERR	10h
3	Reserved = 0				Method of Reporting				03h
4-7	(MSB) Interval Timer (LSB)								00h
									00h
									00h
									00h
8-11	(MSB) Report Count (LSB)								00h

- **PERF** (Performance) bit is not supported and is ignored. Informational Exception operations will not cause performance delays.
- **EBF** (Enable Background Function) bit is not supported and is ignored. Background functions are always enabled.
- **EWASC** (Enable Warning ASC) bit of zero indicates that Temperature Warnings will not be reported. An EWASC bit of one allows Temperature Warnings to be reported, if the temperature inside the disk enclosure exceeds the threshold set in Mode Page 00h.The Method of Reporting field controls the reporting method. EWASC is independent of DEXCPT.
- **DEXCPT** (Disable Exception Control) bit of zero indicates information exception operations are enabled. The reporting of information exception conditions when the DEXCPT bit is set to zero is determined from the Method of Reporting field. A DEXCPT bit of one indicates the Target disabled all information exception operations.
- **TEST** bit of one instructs the drive to generate false drive notifications at the next interval time, (as determined by the INTERVAL TIMER field), if the DEXCPT is zero. The Method of Reporting and Report Count would apply. The false drive failure is reported as sense qualifier 5DFFh. The TEST bit of zero instructs the drive to stop generating any false drive notifications.
- **Enable Background Error (EBACKERR)** bit of zero disables reporting of background self-test errors and background scan errors via Information Exceptions Control. An EBACKERR bit of one enables reporting of these background errors as Information Exception Warnings. The method of reporting these errors is determined from the MRIE field.
- **LOGERR** (Log Errors) is not used and ignored internally by the Target.
- Method of Reporting Informational Exceptions indicates the methods used by the Target to report informational exception conditions.

Table 167 Method of Reporting

Code	Description
0h	**No reporting of informational exception condition:** This method instructs the Target to not report informational exception condition.
1h	**Asynchronous event reporting:** Not supported.
2h	**Generate unit attention:** This method instructs the Target to report informational exception conditions by returning a *Check Condition* status on any command. The sense key is set to *Unit Attention* and the additional sense code indicates the cause of the informational exception condition. The command that has the *Check Condition* is not executed before the informational exception condition is reported.
3h	**Conditionally generate recovered error:** This method instructs the Target to report informational exception conditions, dependent on the value of the PER bit of the error recovery parameters mode page, by returning a *Check Condition* status on any command. The sense key is set to *Recovered Error* and the additional sense code indicates the cause of the informational exception condition. The command that has the *Check Condition* completes without error before any informational exception condition is reported.
4h	**Unconditionally generate recovered error:** This method instructs the Target to report informational exception conditions, regardless of the value of the PER bit of the error recovery parameters mode page, by returning a *Check Condition* status on any command. The sense key is set to *Recovered Error* and the additional sense code indicates the cause of the informational exception condition. The command that has the *Check Condition* completes without error before any informational exception condition is reported.
5h	**Generate no sense:** This method instructs the Target to report informational exception conditions by returning a *Check Condition* status on any command. The sense key is set to *No Sense* and the additional sense code indicates the cause of the informational exception condition. The command that has the *Check Condition* completes without error before any informational exception condition is reported.
6h	**Only report informational exception condition on request:** This method instructs the Target to preserve the informational exception(s) information. To find out about information exception conditions the Application Client polls the Target by issuing an unsolicited *Request Sense* command. The sense key is set to *No Sense* and the additional sense code indicates the cause of the informational exception condition.
7h-Fh	Reserved.

- **Interval Timer** field indicates the period in 100 millisecond increments for reporting that an informational exception condition has occurred. The target shall not report informational exception conditions more frequently than the time specified by the Interval Timer field and as soon as possible after the time interval has elapsed. After the informational exception condition has been reported the interval timer is restarted. A value of zero or 0xFFFFFFFF in the Interval Timer field indicates that the target only reports the informational exception condition one time and will override the value set in the Report Count Field.
- **Report Count** Field indicates the number of times the Target reports an informational exception condition. The Report Count of ZERO indicates no limits on the number of times the Target reports an informational exception condition.

8.11.14.1 Background Control (Subpage 01h)

Table 168 Background Control (Subpage 01h)

Byte	Bit								Default
	7	6	5	4	3	2	1	0	
0	PS	SPF=1	Page Code = 1Ch						DCh
1	Subpage Code = 01h								01h
2-3	Page Length = 0Ch								000Ch
4	Reserved = 0					S_L_Full	LOWIR	EN_BMS	01h
5	Reserved = 0							EN_PS	00h
6-7	Background Medium Scan Interval Time								003F0h
8-9	Background Pre-Scan Time Limit								0000h
10-11	Minimum Idle Time Before Background Scan								0000h
12-13	Maximum Time To Suspend Background Scan (Ignored)								0000h
14-15	Reserved = 0								0000h

- **Suspend On Log Full (S_L_FULL)** bit set to zero allows background scans to continue if the results log (Log Sense Page 15h) is full.S_L_FULL bit set to one will cause background scans to suspend when the log is full.
- **Log Only When Intervention Required (LOWIR)** bit set to zero allows logging of all medium errors in the results log (Log Sense Page 15h).When the LOWIR bit is set to one, only unrecovered medium errors will be logged.
- **EN_BMS (Enable Background Medium Scan)** bit set to zero specifies that the background medium scan is disabled. EN_BMS bit set to one specifies that background medium scan operations are enabled. If a background medium scan is in progress when the EN_BMS bit is changed from one to zero, then the medium scan shall be suspended until the EN_BMS bit is set to one, at which time the medium scan shall resume from the suspended location.
- **EN_PS (Enable Pre-Scan)** bit set to zero specifies that the pre-scan is disabled. If a pre-scan operation is in progress when EN_PS is changed from a one to a zero, then pre-scan is halted. An EN_PS bit set to one specifies that a pre-scan operation is started after the next power-on cycle. Once this pre-scan has completed, another pre-scan shall not occur unless the EN_PS bit is set to zero, then set to one, and another power-on cycle occurs.
- **Background Medium Scan Interval Time** specifies the minimum time, in hours, between the start of one background medium scan operation and the start of the next background medium scan operation. That the drive will limit the value to E904h(59,652) hour(about 6.8 years).
- **Background Pre-Scan Time Limit** specifies the maximum time, in hours, for a pre-scan operation to complete. If the pre-scan operation does not complete within the specified time, then it is halted. A value of zero specifies an unlimited time limit.
- **Minimum Idle Time Before Background Scan** specifies the minimum time, in milliseconds, that the drive must be idle before resuming a background media scan or pre-scan. A value of zero will be treated as the default value of 1.0 second. Any value less than 100 milliseconds will be treated as 100 milliseconds. The internal timer granularity is 50 milliseconds.
- **Maximum Time To Suspend Background Scan** (Ignored).

8.12 MODE SENSE (10) - (5A)

Table 169 MODE SENSE (10) - (5A)

Byte	Bit							
	7	6	5	4	3	2	1	0
0	Command Code = 5Ah							
1	Reserved = 0			LLBAA	DBD	Reserved = 0		
2	PCF		Page Code					
3	Subpage code							
4-6	Reserved = 0							
7-8	(MSB)		Allocation Length				(LSB)	
9	VU = 0		Reserved = 0				FLAG	LINK

The MODE SENSE (10) - (5A) command provides a means for the drive to report various device parameters to the initiator. See the MODE SENSE (6) - (1A) command for a description of the fields in this command.

- **Long LBA Accepted (LLBAA)** bit set to zero ensures that if a Block Descriptor is present it must be a Short LBA Block Descriptor. If the LLBAA bit is set to one, the Long LBA Block Descriptor may be used.

8.13 PERSISTENT RESERVE IN (5E)

Table 170 Persistent Reserve In (5E)

Byte	Bit							
	7	6	5	4	3	2	1	0
0	Command Code = 5Eh							
1	Reserved = 0			Service Action				
2-6	Reserved = 0							
7-8	(MSB) Allocation Length (LSB)							
9	VU = 0		Reserved = 0				FLAG	LINK

The PERSISTENT RESERVE IN command is used to obtain information about persistent reservations and reservation keys that are active within the controller. This command is used in conjunction with the PERSISTENT RESERVE OUT command PERSISTENT RESERVE OUT (5F).

The **Allocation Length** indicates how much space has been allocated for the returned parameter data. If the length is not sufficient to contain all parameter data, the first portion of the data will be returned. If the remainder of the data is required, the initiator should send a new PERSISTENT RESERVE IN command and an Allocation Length large enough to contain all data.

8.13.1 Service Action

The following service action codes are implemented. If a reserved service action code is specified, the drive returns a **Check Condition** status. The sense key is set to *Illegal Request* and the additional sense data is set to *Invalid Field in CDB*.

Table 171 PERSISTENT RESERVE IN, Service Action Codes

Code	Name	Descriptions
00h	Read Keys	Reads all registered Reservation Keys
01h	Read Reservations	Reads all current persistent reservations
02h	Report Capabilities	Returns capability information
03h	Read Full Status	Reads complete information about all registrations and the persistent reservation, if any
04h-1Fh	Reserved	Reserved

8.13.2 Parameter data for Read Keys

Table 172 PERSISTENT RESERVE IN, parameter data for Read Keys

Byte	Bit							
	7	6	5	4	3	2	1	0
0-3	(MSB) Generation (LSB)							
4-7	(MSB) Additional length (n-7) (LSB)							
8-15	(MSB) First reservation key (LSB)							
	:							
(n-7) - n	(MSB) Last reservation key (LSB)							

Generation is a counter that increments when PERSISTENT RESERVE OUT command with “Register” or “Preempt and Clear” completes successfully. Generation is set to 0 as part of the power on reset process and hard reset process.

The **Generation** field contains a 32-bit counter that the Target shall increment every time a PERSISTENT RESERVE OUT command requests a Register, a Clear, a Preempt, a Preempt and Abort service, or a Register and Ignore existing key action. The counter shall not be incremented by a PERSISTENT RESERVE IN command, by a PERSISTENT RESERVE OUT command that performs a Reserve or Release service action, or by a PERSISTENT RESERVE OUT command that is not performed due to an error or reservation conflict. Regardless of the APTPL value the generation value shall be set to 0 as part of the power on reset process.

The **Additional Length** field contains a count of the number of bytes in the reservation key list. If the allocation length specified by the PERSISTENT RESERVE IN command is not sufficient to contain the entire parameter list, then only the bytes from 0 to the maximum allowed allocation length shall be sent to the Initiator. The incremental remaining bytes shall be truncated, although the Additional Length field shall still contain the actual number of bytes in the reservation key list without consideration of any truncation resulting from an insufficient allocation length. This shall not be considered an error.

The **Reservation Key** list contains the 8-byte reservation keys for all Initiators that have registered through all ports with the Target.

8.13.3 Parameter Data for Read Reservations

Table 173 PERSISTENT RESERVE IN, parameter data for Read Reservations

Byte	Bit							
	7	6	5	4	3	2	1	0
0-3	(MSB) Generation (LSB)							
4-7	(MSB) Additional length (n-7) (LSB)							
8-n	(MSB) Reservation descriptors (LSB)							

The **Generation** field shall be as defined for the Persistent Reserve in Read Keys parameter data. The Additional Length field contains a count of the number of bytes to follow in the Reservation Descriptor(s).

If the **Allocation length** specified by the PERSISTENT RESERVE IN command is not sufficient to contain the entire parameter list, then only the bytes from 0 to the maximum allowed allocation length shall be sent to the Initiator. The remaining bytes shall be truncated, although the Additional Length field shall still contain the actual number of bytes of the Reservation Descriptor(s) and shall not be affected by the truncation. This shall not be considered an error.

The format of the **Reservation Descriptors** is defined in the Persistent Reserve in Reservation Descriptor table. There shall be a Reservation Descriptor for the persistent reservation, if any, present in the Target having a persistent reservation.

Table 174 PERSISTENT RESERVE IN, Read Reservation Descriptor

Byte	Bit							
	7	6	5	4	3	2	1	0
0-7	(MSB) Reservation key (LSB)							
8-11	(MSB) Scope-specific address = 0 (LSB)							
12	Reserved							
13	Scope=0				Type			
14-15	(MSB) Extent Length=0 (LSB)							

The **Scope** of each persistent reservation created by a PERSISTENT RESERVE OUT command will be returned. See the PERSISTENT RESERVE OUT command section for details.

8.14 PERSISTENT RESERVE OUT (5F)

Table 175 PERSISTENT RESERVE OUT (5F)

Byte	Bit							
	7	6	5	4	3	2	1	0
0	Command Code = 5Fh							
1	Reserved = 0			Service Action				
2	Scope=0				Type			
3-6	Reserved = 0							
7-8	Parameter List Length = 18h							
9	VU = 0		Reserved = 0				FLAG	LINK

The PERSISTENT RESERVE OUT command is used to request service actions that reserve the drive for the exclusive or shared use of the initiator. The command uses other service actions to manage and remove such reservations. This command is used in conjunction with the PERSISTENT RESERVE IN command, and should not be used with the RESERVE and RELEASE commands.

*Note: If a PERSISTENT RESERVE OUT command is received when a RESERVE is active for the drive, the command will be rejected with **Reservation Conflict** status.*

Parameter List Length must be 18h. Or, 1Ch + Transport ID Param data length (n-27). If not, Check Condition status will be returned, with sense key of Illegal Request and additional sense code of Parameter List Length Error.

8.14.1 Service Action

The following service action codes are supported.

Table 176 PERSISTENT RESERVE OUT, Service Action Code

Code	Name	Description
00h	Register	Register a reservation key
01h	Reserve	Create a persistent reservation using a reservation key
02h	Release	Release a persistent reservation
03h	Clear	Clear all reservation keys and all persistent reservations
04h	Preempt	Preempt persistent reservations from another Initiator
05h	Preempt and Abort	Preempt persistent reservations from another Initiator and clear the task set for the preempted Initiator
06h	Register and Ignore existing key	Register a reservation key
07h-1Fh	Reserved	Reserved

8.14.2 Type

The **Type** field specifies the characteristics of the persistent reservation being established for all customer data sectors. The table below describes the supported types and how read and write commands are handled for each reservation type.

Table 177 PERSISTENT RESERVE OUT, Type Code

Code	Name	Description
0h	Reserved	Reserved
1h	Write Exclusive	Reads Shared: Any initiator may execute commands that transfer from the media. Writes Exclusive: Only the initiator with the reservation may execute commands that transfer data to the media; Reservation Conflict status will be returned to other initiators.
2h	Reserved	Reserved
3h	Exclusive Access	Reads Exclusive: Only the initiator with the reservation may execute commands that transfer data from the media; Reservation Conflict status will be returned to other initiators. Writes Exclusive: Only the initiator with the reservation may execute commands that transfer data to the media; Reservation Conflict status will be returned to other initiators.
4h	Reserved	Reserved
5h	Write Exclusive Registrants Only	Reads Shard: Any initiator may execute commands that transfer from media. Writes Exclusive: Only registered initiators may execute commands that transfer data to the media; Reservation Conflict status will be returned to other initiators.
6h	Exclusive Access Registrants Only	Reads Exclusive: Only registered initiators may execute commands that transfer data from the media; Reservation Conflict status will be returned to other initiators. Writes Exclusive: Only registered initiators may execute commands that transfer data to the media; Reservation Conflict status will be returned to other initiators.
7h-Fh	Reserved	Reserved

The RESPONSE frame is sent by the Drive to the Initiator (in bound data) or by the Initiator to the Drive (out bound data).

8.14.3 Parameter list

The **Parameter List** required to perform the PERSISTENT RERSERVE OUT command is defined in the table below. All fields must be sent on all PERSISTENT RESERVE OUT commands, even if the field is not required for the specified service action.

Table 178 Parameter List

Byte	Bit							
	7	6	5	4	3	2	1	0
0-7	(MSB) Reservation Key (LSB)							
8-15	(MSB) Service Action Reservation Key (LSB)							
16-19	(MSB) Reserved = 0 (LSB)							
20	Reserved = 0				SPEC_I_P	ALL_TG_PT	Reserved = 0	APTPL
21-23	Reserved = 0							

Reservation Key contains an 8-byte value provided by the initiator, and identifies the initiator that issued the PERSISTENT RESERVE OUT command. The Reservation Key must match the registered reservation key for the initiator for all service actions except REGISTER and REGISTER AND IGNORE EXISTING KEY.

Service Action Reservation Key contents vary based on the service action. For REGISTER and REGISTER AND IGNORE EXISTING KEY, the Service Action Reservation Key must contain the new reservation key to be registered. For PREEMPT and PREEMPT AND ABORT, the field contains the reservation key of the persistent reservation that is being preempted. This field is ignored for all other service actions.

If the Specify Initiator Ports (**SPEC_I_PT**) bit is set to zero, the drive shall apply the registration only to the I_T nexus that sent the PERSISTENT RESERVE OUT command. If the SPEC_I_PT bit is set to one for any service action except the REGISTER service action, then the command shall be terminated with CHECK CONDITION status, with the sense key set to ILLEGAL REQUEST, and the additional sense code set to INVALID FIELD IN PARAMETER LIST. If the SPEC_I_PT bit is set to one for the REGISTER service action, the additional parameter data (see Table 179) shall include a list of transport IDs and the drive shall also apply the registration to the I_T nexus for each initiator port specified by a Transport ID. If a registration fails for any initiator port (e.g., if the logical unit does not have enough resources available to hold the registration information), no registrations shall be made, and the command shall be terminated with CHECK CONDITION status.

APTPL (Activate Persist Through Power Loss) bit is valid only for REGISTER and REGISTER AND IGNORE EXISTING KEY, and is ignored for all other service actions. If the last valid APTPL bit value received is zero, power loss will cause all persistent reservations to be released, and all reservation keys to be removed. If the last valid APTPL bit value received is one, any persistent reservation and all reservation keys for all initiators will be retained across power cycles.

Table 179 PERSISTENT RESERVO OUT specify initiator ports additional parameter data

Byte	Bit							
	7	6	5	4	3	2	1	0
24	(MSB)							
...	TRANSPORTID PARAMETER DATA LENGTH(n-27)							
27								(LSB)
	Transport IDs list							
28	Transport ID[first]							
...								
	...							
...	Transport ID[last]							
n								

For Transport IDs,

The All Target Ports (**ALL_TG_PT**) bit is valid only for the REGISTER service action and the REGISTER AND IGNORE EXISTING KEY service action, and shall be ignored for all other service actions. Support for the ALL_TG_PT bit is optional. If the drive receives a REGISTER service action or a REGISTER AND IGNORE EXISTING KEY service action with the ALL_TG_PT bit set to one, it shall create the specified registration on all target ports in the SCSI target device known to the drive (i.e., as if the same registration request had been received individually through each target port). If the drive receives a REGISTER service action or a REGISTER AND IGNORE EXISTING KEY service action with the ALL_TG_PT bit set to zero, it shall apply the registration only to the target port through which the PERSISTENT RESERVE OUT command was received. **APTPL (Activate Persist Through Power Loss)** bit is valid only for REGISTER and REGISTER AND IGNORE EXISTING KEY, and is ignored for all other service actions. If the last valid APTPL bit value received is zero, power loss will cause all persistent reservations to be released, and all reservation keys to be removed. If the last valid APTPL bit value received is one, any persistent reservation and all reservation keys for all initiators will be retained across power cycles.

The RESPONSE frame is sent by the Drive to the Initiator (in bound data) or by the Initiator to the Drive (out bound data).

8.14.4 Summary

Table 180 PERSISTENT RESERVE OUT, Service Action, Parameters

Service Action	Parameters						Generation counter
	Scope Type	Rsv Key	SvcAct RsvKey	S-spec addr	Extent length	APTPL	
(0) Register	ignore	verify	save	ignore	ignore	apply	+ 1
(1) Reserve	apply	verify	ignore	ignore	ignore	ignore	---
(2) Release	apply	verify	ignore	ignore	ignore	ignore	---
(5) Preempt and Abort	apply	verify	save	Ignore	ignore	ignore	+ 1

8.14.4.1 Scope, Type

The Scope and the Type are applied in the process for the Reserve, Release, and Preempted and Clear service action but they are ignored in the process for the Register service action because they are not used.

8.14.4.2 Reservation Key

The Reservation Key is verified in each service action process. If the Initiator that registered a key is different from the Initiator requesting PERSISTENT RESERVE OUT command, the drive returns a **Reservation Conflict** status.

8.14.4.3 Service Action Reservation Key

On Register service action, the drive saves the key specified in the Service Action Reservation Key field as a key of Initiator requesting PERSISTENT RESERVE OUT command.
On Preempt and Clear service action, the reservation that has a key specified in the Service Action Reservation Key field is preempted.
On other service actions, this field is ignored.

8.14.4.4 APTPL

The APTPL (Active Persist Through Power Loss) is valid only for the Register service action. The drive ignores the APTPL in other service actions.
The following table shows the relationship between the last valid APTPL value and information held by the drive.

Table 181 APTPL and information held by a drive

Information held by the drive	**The last valid APTPL value**	
	0	**1**
Registration	all keys are set to 0	retained
Persistent Reservation	all are removed	retained
Generation counter	set to 0	set to 0

8.14.4.5 Generation counter

The drive increments the Generation counter when Register service action or Preempt and Clear service action complete successfully.

8.15 PRE-FETCH (10) - (34)

Table 182 PRE-FETCH (10) - (34)

Byte	Bit							
	7	6	5	4	3	2	1	0
0	Command Code = 34h							
1	Reserved = 0			Reserved = 0			Immed = 0	Obsolete
2-5	(MSB) Logical Block Address (LSB)							
6	Reserved = 0							
7-8	(MSB) Transfer Length (LSB)							
9	VU = 0		Reserved = 0				FLAG	LINK

The PRE-FETCH command requests the drive to transfer data to the cache. No data is transferred to the Initiator.

- **Transfer length** field specifies the number of contiguous blocks of data that are to be transferred into the cache. A transfer length of zero indicates that blocks are to be transferred into the cache until the segment is filled or until the last block on the media.
- **Immed** (Immediate) must be zero. An immediate bit of zero indicates that the status shall not be returned until the operation has completed.

If the Immed bit is set to one, the drive returns a **Check Condition** status. The sense key shall be set to *Illegal Request* and the additional sense code shall be set to *Invalid Field in CDB*.

8.16 PRE-FETCH (16) - (90)

Table 183 PRE-FETCH (16) - (90)

Byte	Bit							
	7	6	5	4	3	2	1	0
0	Command Code = 90h							
1	Reserved = 0			Reserved = 0			Immed = 0	Reserved = 0
2-9	(MSB) Logical Block Address (LSB)							
10-13	Transfer Length							
14	Restricted For MMC-4	Reserved = 0		GROUP NUMBER = 0				
15	VU = 0		Reserved = 0			FLAG		LINK

The PRE-FETCH command requests the drive to transfer data to the cache. No data is transferred to the Initiator.

- **Transfer length** field specifies the number of contiguous blocks of data that are to be transferred into the cache. A transfer length of zero indicates that blocks are to be transferred into the cache until the segment is filled or until the last block on the media.
- **Immed** (Immediate) must be zero. An immediate bit of zero indicates that the status shall not be returned until the operation has completed.

If the Immed bit is set to one, the drive returns a **Check Condition** status. The sense key shall be set to *Illegal Request* and the additional sense code shall be set to *Invalid Field in CDB*6) - (08)

8.17 READ (6) - (08)

Table 184 READ (6) - (08)

Byte	Bit							
	7	6	5	4	3	2	1	0
0	Command Code = 08h							
1	Reserved = 0			(MSB) LBA				
2-3	Logical Block Address (LSB)							
4	Transfer Length							
5	VU = 0		Reserved = 0				FLAG	LINK

The READ command requests the drive to transfer from the medium to the initiator the specified number of blocks (Transfer Length) starting at the specified Logical Block Address (LBA).

- **Logical block address** field specifies the logical unit at which the READ operation shall begin.
- **Transfer length** field specifies the number of blocks to be transferred. A value of zero implies 256 blocks are to be transferred.

Note: Error recovery procedure (ERP) handles errors. The error recovery parameters specified by the MODE SELECT command control ERPs. If the drive is formatted with protection information, no protection information will be transmitted or checked.

8.18 READ (10) - (28)

Table 185 READ (10) - (28)

Byte	Bit							
	7	6	5	4	3	2	1	0
0	Command Code = 28h							
1	RDPROTECT			DPO	FUA	RARC	FUA_NV	Obsolete
2-5	(MSB) Logical Block Address (LSB)							
6	Reserved = 0							
7-8	(MSB) Transfer Length (LSB)							
9	VU = 0		Reserved = 0				FLAG	LINK

The READ (10) command requests the drive to transfer data to the Initiator. The larger LBA and Transfer Length fields permit greater quantities of data to be requested per command than with the READ command and are required to access the full LBA range of the larger capacity drives.

- **FUA_NV** (Force Unit Access Non-Volatile Cache) may be set to 0 or 1, but is ignored since NV_SUP=0 in Inquiry Page 86h.
- **Transfer length** The number of contiguous blocks to be transferred. If the transfer length is zero, the seek occurs, but no data is transferred. This condition is not considered an error. If read ahead is enabled, a read ahead is started after the seek completes.
- **DPO** (Disable Page Out) bit of one indicates that the data accessed by this command is to be assigned the lowest priority for being written into or retained by the cache. A DPO bit of one overrides any retention priority specified in the Mode Select Page 8 Caching Parameters. A DPO bit of zero indicates the priority is determined by the retention priority. The Initiator should set the DPO bit when the blocks read by this command are not likely to be read again in the near future.
- **FUA** (Force Unit Access) bit of one indicates that the data is read from the media and not from the cache. A FUA bit of zero allows the data to be read from either the media or the cache.
- **RDPROTECT** defines the manner in which protection information read from disk shall be checked during processing of the command. Protection information is stored on disk, and may be transmitted to the drive's internal data buffer and to the initiator with the user data. If the drive is not formatted with protection information, RDPROTECT must be set to 000b, else **Check Condition** status will be returned with sense key of Illegal Request and additional sense code of Invalid Field in CDB.

  RDPROTECT=000b
  - Protection information is not transmitted to the initiator and is not checked.

  RDPROTECT=001b
  - Protection information is transmitted to the initiator with the user data
  - Logical Block Guard is checked
  - Logical Block Application Tag is checked (applies to READ(32) command only)
  - Logical Block Reference Tag is checked

  RDPROTECT=010b
  - Protection information is transmitted to the initiator with the user data
  - Logical Block Guard is not checked
  - Logical Block Application Tag is checked (applies to READ(32) command only)

- Logical Block Reference Tag is checked

RDPROTECT=011b

- Protection information is transmitted to the initiator with the user data
- Logical Block Guard is not checked
- Logical Block Application Tag is not checked
- Logical Block Reference Tag is not checked

RDPROTECT=100b

- Protection information is transmitted to the initiator with the user data
- Logical Block Guard is checked
- Logical Block Application Tag is not checked
- Logical Block Reference Tag is not checked

RDPROTECT=101b, 110b, 111b, 001b
These values are reserved. **Check Condition** status will be returned with sense key of Illegal Request and additional sense code of Invalid Field in CDB.

If a check of the protection information fails, **Check Condition** status will be returned with sense key of Aborted Command and additional sense code indicating which protection field check failed.

Refer to the ANSI T10 standards for additional details of protection information.

If the transfer length is zero, no data is transferred. The CDB is validated and protocol checked and, if no problems are found, **Good** status is returned immediately. This condition is not considered an error.

8.19 READ (12) - (A8)

Table 186 READ (12) - (A8)

Byte	Bit							
	7	6	5	4	3	2	1	0
0	Command Code = A8h							
1	RDPROTECT			DPO	FUA	RARC	FUA_NV	Rsvd = 0
2 - 5	(MSB) Logical Block Address (LSB)							
6-9	(MSB) Transfer Length (LSB)							
10	Reserved = 0							
11	VU = 0		Reserved = 0				FLAG	LINK

The READ (12) command causes the drive to transfer data to the initiator. See the READ(10) description for the definitions of the fields in this command.

8.20 READ (16) - (88)

Table 187 READ (16) - (88)

Byte	Bit							
	7	6	5	4	3	2	1	0
0	Command Code = 88h							
1	RDPROTECT			DPO	FUA	RARC	FUA_NV	Rsvd=0
2 - 9	(MSB) Logical Block Address (LSB)							
10-13	(MSB) Transfer Length (LSB)							
14	Restricted For MMC-4	Reserved = 0		GROUP NUMBER = 0				
15	VU = 0		Reserved = 0				FLAG	LINK

The READ (16) command causes the drive to transfer data to the initiator. See the READ (10) description for the definitions of the fields in this command.

8.21 READ (32) - (7F/09)

Table 188 READ (32) - (7F/09)

Byte	Bit							
	7	6	5	4	3	2	1	0
0	Command Code = 7Fh							
1	VU = 0		Reserved = 0				FLAG	LINK
2-5	Reserved = 0							
6	Reserved = 0			Group Number = 0				
7	Additional CDB Length = 18h							
8-9	Service Action = 0009h							
10	RDPROTECT			DPO	FUA	RARC	FUA_NV	Rsvd=0
11	Reserved = 0							
12-19	(MSB) Logical Block Address (LSB)							
20-23	(MSB) Expected Initial Logical Block Reference Tag (LSB)							
24-25	(MSB) Logical Block Application Tag (LSB)							
26-27	(MSB) Logical Block Application Tag Mask (LSB)							
28-31	(MSB) Transfer Length (LSB)							

The READ command requests that the drive transfer data from disk to the initiator. Each logical block transferred includes user data and may include protection information, based on the RDPROTECT field and the drive format.

If the drive is formatted with type 2 protection (PROT_EN=1 and P_TYPE=001b in the READ CAPACITY (16) parameter data), then this command will be processed normally. Any other protection types will result in Check Condition status to be returned with sense key of Illegal Request and additional sense code of Invalid Command Operation Code.

The Expected Initial Logical Block Reference Tag field contains the value of the Logical Block Reference Tag field expected in the protection information of the first logical block accessed by the command.

If the ATO bit is set to one in Mode Page 0Ah, the Logical Block Application Tag Mask field contains a value that is a bit mask for enabling the checking of the Logical Block Application Tag field in the protection information for each logical block accessed by the command. A Logical Block Application Tag Mask bit set to one enables the checking of the corresponding bit of the Expected Logical Block Application Tag field with the corresponding bit of the Logical Block Application Tag field in the protection information.

If the ATO bit is set to zero, the Logical Block Application Tag Mask field and the Expected Logical Block Application Tag field are ignored.

8.22 READ BUFFER (3C)

Table 189 READ BUFFER (3C)

Byte	Bit							
	7	6	5	4	3	2	1	0
0	Command Code = 3Ch							
1	Reserved = 0			Mode				
2	Buffer ID							
3-5	(MSB) Buffer Offset (LSB)							
6-8	(MSB) Allocation Length (LSB)							
9	VU = 0		Reserved = 0				FLAG	LINK

The READ BUFFER command is used in conjunction with the WRITE BUFFER command as a diagnostic function for testing the memory of the drive and the SCSI bus integrity. This command does not alter the medium.
The function of this command and the meaning of fields within the command descriptor block depend on the contents of the mode field.

Table 190 Mode

MODE	Description
00000	Read Combined Header and Data
00010	Read Data
00011	Descriptor
01010	Read Data from Echo Buffer
01011	Echo Buffer Descriptor
11010	Enable Expander Communications Protocol and Echo Buffer
11100	Error History
All others	Not supported

8.22.1 Combined Header And Data (Mode 00000b)

In this mode a 4-byte header followed by data bytes is returned to the Initiator during the DATA IN phase. The Buffer ID and the buffer offset field are reserved.
The drive terminates the DATA IN phase when allocation length bytes of header plus data have been transferred or when the header and all available data have been transferred to the Initiator, whichever is less.
The 4-byte READ BUFFER header (see Table 191) is followed by data bytes from the data buffer of the drive.

Table 191 Read Buffer Header

Byte	Bit						
	7	6	5	4	3	2	1
0-3	(MSB) Buffer Capacity (LSB)						

The buffer capacity specifies the total number of data bytes that are available in the data buffer of the drive. This number is not reduced to reflect the allocation length nor is it reduced to reflect the actual number of bytes written using the WRITE BUFFER command.
Following the READ BUFFER header the drive will transfer data from its data buffer.

8.22.2 Read Data (Mode 00010b)

In this mode, the DATA IN phase contains buffer data.

- **Buffer ID** field must be set to zero, indicating the data transfer buffer. If another value is specified, the results may be unpredictable.
- **Buffer Offset** specifies the offset of the memory space specified by the Buffer ID. The Initiator should conform to the offset boundary requirements returned in the READ BUFFER descriptor. If the value exceeds the buffer specified, the command is terminated with **Check Condition** status. The drive shall set sense key to *Illegal Request* and additional sense code to *Illegal Field in CDB*.
- **Allocation Length** The drive terminates the DATA IN phase when allocation length bytes of data have been transferred or when the header and all available data have been transferred to the Initiator, whichever is less.

8.22.3 Descriptor (Mode 00011b)

In this mode, a maximum of four bytes of READ BUFFER descriptor information are returned. The drive returns the descriptor information for the buffer specified by the Buffer ID.

- **Buffer ID** field should normally be set to zero, indicating the drive data transfer buffer. If any other value is specified, the results may be unpredictable.
- **Buffer Offset** field is reserved.
- **Allocation Length** should be set to four or greater. The drive transfers the allocation length or four bytes of READ BUFFER descriptor, whichever is less. The allocation length of zero indicates no data is transferred. The allocation length of greater than zero and less than four (size of the Descriptor) is an invalid request and will cause the command to be terminated with **Check Condition** status. The drive shall set sense key to *Illegal Request* and additional sense code to *Illegal Field in CDB*.

The READ BUFFER descriptor is described in the table below.

Table 192 Read Buffer Description

Byte	Bit						
	7	6	5	4	3	2	1
0	Offset Boundary = 0x09						
1-3	(MSB) Buffer Capacity (LSB)						

The value contained in the Buffer Offset field of subsequent WRITE BUFFER and READ BUFFER commands should be a multiple of two to the power of the offset boundary. The offset boundary is always set to nine, which indicates Sector Boundaries.

8.22.4 Read Data from Echo Buffer (Mode 01010b)

In this mode the drive transfers data from the echo buffer. The echo buffer will transfer the same data as when the WRITE BUFFER command was issued with the mode field set to echo buffer.
WRITE BUFFER command with the mode field set to echo buffer should be sent prior to the READ BUFFER command; otherwise the READ BUFFER command will be terminated with **Check Condition** status and *Illegal Request*.
In this mode Read Buffer transfers the specified amount of data or the amount previously written with a Write Buffer using mode 1010b from the echo buffer, whichever is less.
Issuing a Read Buffer mode 1010b before a Write Buffer mode 1010b will cause indeterminate data to be returned.
The most significant two bytes of the Allocation Length are ignored. The specified amount of data transferred should not be larger than the echo buffer capacity. The echo buffer capacity may be determined by using Read Buffer mode 1011b. Any additional data transferred over and above the echo buffer capacity is regarded as indeterminate.
The Buffer ID and Buffer Offset fields are ignored in this mode.

Note: The echo buffer is a separate buffer from the data buffer used with other read buffer modes. It is intended to be used for domain validation purposes.

8.22.5 Echo Buffer Descriptor (Mode 01011b)

In this mode, a maximum of four bytes of Read Buffer Descriptor information is returned. The drive returns the descriptor information for the echo buffer. The Buffer Offset field is reserved in this mode and must be zero. The drive transfers the lesser of the allocation length or four bytes of following Echo Buffer Descriptor.

Table 193 Echo Buffer Descriptor

Byte	Bit							
	7	6	5	4	3	2	1	0
0	Reserved = 0							EBOS=0
1	Reserved = 0							
2	Reserved = 0			(MSB) Buffer Capacity				
3	Buffer Capacity (LSB)							

- **EBOS** (Echo Buffer Overwritten Supported) bit of zero indicates that the echo buffer is shared by all Initiators.
- **Buffer Capacity** field returns the size of the echo buffer in byte aligned to a 4-byte boundary.

8.22.6 Expander Communications and Echo Buffer (Mode 11010b)

Receipt of a READ BUFFER command with this mode (11010b) causes a communicative expander to enter the expanded communication protocol mode. SCSI target devices that receive a READ BUFFER command with this mode shall process it as if it were a READ BUFFER command with mode 01010b (see 8.22.4) Read Data from Echo Buffer).

8.22.7 Error History (Mode 11100b)

The Buffer ID field specifies the action that the device server shall perform, and the parameter data, if any, that the device server shall return.

Table 194 Error History Buffer ID Field

Buffer ID Code	Description	Buffer Offset	Error History I_T Nexus Constrained
00h	Return error history directory	0000h	Yes
01h	Return error history directory and create new error history snapshot	0000h	Yes
02h	Return error history directory and establish new error history I_T Nexus	0000h	No
03h	Return error history directory, establish new error history I_T Nexus, and create new error history snapshot	0000h	No
04h to 0Fh	Reserved		Yes
10h to EFh	Return error history	0000h to FFFFh	Yes
F0h to FDh	Reserved		Yes
FEh	Clear error history I_T Nexus	Ignored	Yes
FFh	Clear error history I_T Nexus and release error history snapshot	Ignored	Yes

The drive will terminate the Read Buffer command with **Check Condition** status with the sense key set to *Illegal Request* and the additional sense code set to *Operation In Progress* if the drive receives a Read Buffer command:

a) with the Mode field set to 1Ch;
b) with the Buffer ID field set to a value that is constrained by error history I_T nexus;
c) if an error history I_T nexus exists and the command is received from an I_T nexus that is different than that I_T nexus; and
d) an error history snapshot exists.

The Buffer Offset field specifies the byte offset from the start of the buffer specified by the Buffer ID field from which the drive will return data. The application client should conform to the offset boundary requirements indicated in the Read Buffer descriptor. If the buffer offset is not one of those shown in the table above or the drive is unable to accept the specified buffer offset, then the drive shall terminate the Read Buffer command with **Check Condition** status, with the sense key set to *Illegal Request*, and the additional sense code set to *Invalid Field In CDB*.

Whenever allowed by established error history I_T nexus constraints, if any, all error history directory device server actions return an error history directory.

Table 195 Error History Directory

Byte	**Bit**							
	7	6	5	4	3	2	1	0
0-7	(MSB) T10 Vendor Identification = “WDC “(ASCII) (LSB)							
8	Version							
9	Reserved			EHS_Retrieved		EHS_Sourse		CLR_ SUP
10-29	Reserved							
30-31	(MSB) Directory Length (n-31) (LSB)							
	Error History Directory List							
32-39	Error history directory entry [first] (see Table 196)							
-								
(n-7)-n	Error history directory entry [last] (see Table 196)							

The error history directory list contains an error history directory entry for each supported buffer ID in the range of 00h to EFh.

Table 196 Error History Directory Entry

Byte	Bit							
	7	6	5	4	3	2	1	0
0	Supported Buffer ID							
1-3	Reserved							
4-7	(MSB) Maximum Available Length (LSB)							

- **Supported Buffer ID** field indicates the error history buffer ID associated with this entry.
- **Maximum Available Length** field indicates the maximum number of data bytes contained in the buffer indicated by the Supported Buffer ID field. The actual number of bytes available for transfer may be smaller.

Unless an error is encountered, the drive will return parameter data that contains error history in a vendor specific format from the error history snapshot from the specified buffer at the specified buffer offset.

If the drive receives a READ BUFFER command with the Mode field set to 1Ch from the established error history I_T nexus and the Buffer ID field is set to a value that the error history directory shows as not supported, then the drive will terminate the command with **Check Condition** status with the sense key set to *Illegal Request* and the additional sense code set to *Invalid Field In CDB*.

If the value in the Buffer Offset field is not supported, the device server shall terminate the command with **Check Condition** status with the sense key set to *Illegal Request* and the additional sense code set to *Invalid Field In CDB*.

The amount of error history in the specified buffer shall be less than or equal to the number of bytes indicated by the Maximum Available Length field in the error history directory.

8.23 READ CAPACITY (10) - (25)

Table 197 READ CAPACITY (10) - (25)

Byte	Bit							
	7	6	5	4	3	2	1	0
0	Command Code = 25h							
1	Reserved = 0			Reserved = 0				Obsolete
2-5	Obsolete							
6-7	Reserved = 0							
8	Reserved = 0							Obsolete
9	VU = 0		Reserved = 0				FLAG	LINK

The READ CAPACITY command returns information regarding the capacity of the drive.

8.23.1 Returned Data Format

The data returned to the Initiator in response to the READ CAPACITY command is described here. The data is returned in the DATA IN phase.

Table 198 Format of READ CAPACITY command reply

Byte	Bit							
	7	6	5	4	3	2	1	0
0-3	(MSB) Maximum Logical Block Address (LSB)							
4-7	(MSB) Block Length (LSB)							

- **Block Length** specifies the length in bytes of each block of user data (not including protection information).

8.24 READ CAPACITY (16) (9E/10)

Table 199 Read Capacity (16) (9E/10)

Byte	Bit							
	7	6	5	4	3	2	1	0
0	Command Code = 9Eh							
1	Reserved = 0			Service Action = 10h				
2-9	Obsolete							
10-13	(MSB) Allocation Length (LSB)							
14	Reserved = 0							Obsolete
15	VU = 0		Reserved = 0				FLAG	Link

The READ CAPACITY (16) (9E/10) command returns information regarding the capacity of the drive. This command is processed like the standard READ CAPACITY (25) command.

8.24.1 Returned Data Format

The following data is returned to the initiator in the DATA OUT phase.

Table 200 Returned Data Format

Byte	Bit							
	7	6	5	4	3	2	1	0
0-7	(MSB) Maximum Logical Address (LSB)							
8-11	(MSB) Block Length (LSB)							
12	Reserved = 0				P-Type			Prot-EN
13	P_I_Exponent				Logical Blocks per Physical Block Exponent			
14-31	Reserved = 0							

The protection type (P_TYPE) field and the protection enable (PROT_EN) bit indicate the drive's current type of protection.

Table 201 Protection Type (P_TYPE) field

Prot-EN	P-Type	Description
0b	000b	The drive is formatted to type 0 protection
1b	000b	The drive is formatted to type 1 protection
1b	001b	The drive is formatted to type 2 protection

Table 202 Logical Blocks per Physical Block Exponent field

Code	Description
0	One or more physical blocks per logical block
n > 0	2^n logical blocks per physical block

The number of physical blocks per logical block is not reported.

8.25 READ DEFECT DATA (10) - (37)

Table 203 READ DEFECT DATA (10) - (37)

Byte	Bit							
	7	6	5	4	3	2	1	0
0	Command Code = 37h							
1	Reserved = 0			Reserved = 0				0
2	Reserved = 0			Plist	Glist	Defect List Format		
3-6	Reserved = 0							
7-8	(MSB) Allocation Length (LSB)							
9	VU = 0		Reserved = 0				FLAG	LINK

The READ DEFECT DATA command requests that the Target transfer the medium defect data to the Initiator.
If the Target is unable to access any medium defect data it will return a **Check Condition** status with the appropriate sense key. The sense key will be set to either *Medium Error* (03h) if a medium error occurred or *No Sense* (00h) if the list does not exist and the additional sense code will be set to *Defect List Error* (19h).

- **Plist** bit set to one indicates that the Target returns the Plist. A Plist bit of zero indicates that the Target shall not return the Plist of defects.
- **Glist** bit set to one indicates that the Target returns the Glist. A Glist bit of zero indicates that the Target shall not return the Glist.

Note: With both bits set to one Plist and Glist the Target will return both the primary and grown defect lists. With both bits set to zero, the Target will return only a 4-byte Defect List Header.

- **Defect List format** field is used by the Initiator to indicate the preferred format for the defect list.

  The Defect List Format of '100 (Bytes from Index Format)' and '101 (Physical Sector Format)' are supported. If the requested format is not supported by the drive, it will return the defect list in its default format '101' and then terminate the command with **Check Condition** status. The sense key will be set to *Recovered Error* (01h) and the additional sense code will be set to *Defect List Not Found* (1Ch).

The drive sends defect list (Defect Descriptors) in an 8-byte Absolute Block Address (ABA) format that follows a four byte Defect List Header.
The Target will transfer all of the Read Defect Data up to the number of bytes allocated by the Initiator.

Table 204 Defect List Format

Preferred Defect List Format	Returned Defect List Format
Block (000b)	Physical Sector
Bytes from Index (100b)	Bytes from Index
Physical Sector (101b)	Physical Sector
Vendor Unique (110b)	Physical Sector
Reserved (001b)	
Reserved (010b)	
Reserved (011b)	
Reserved (111b)	

Note: The drive will terminate the Data in phase when the Allocation Length has been transferred or when all available Defect Data has been transferred to the Initiator, whichever is less.

The Read Defect Data contains a 4-byte header followed by zero or more defect descriptors.

8.25.1 Defect List Header

Table 205 Defect List Header

Byte	Bit							
	7	6	5	4	3	2	1	0
	Defect List Header							
0	Reserved = 0							
1	Reserved = 0			Plist	Glist	Defect List Format		
2-3	(MSB) Defect List length (LSB)							

8.25.2 Defect List Descriptor

Table 206 Defect List Descriptor

Byte	Bit							
	7	6	5	4	3	2	1	0
	Defect List Header							
0-7	Defect Descriptor 0							
8n - (8n+7)	Defect Descriptor n							

8.25.3 Bytes from Index Format (100b)

Table 207 Defect Descriptors of Bytes from Index Format

Byte	Defect Descriptors
0-2	(MSB) Cylinder Number of Defect (LSB)
3	Head Number of Defect
4-7	(MSB) Defect Bytes from Index (LSB)

Defect Bytes from Index is gotten using the following equation:

Bytes from Index = (Physical Sector Number) * N

Where: N = Bytes per sector

8.25.4 Physical Sector Format (101b)

Table 208 Defect Descriptors of Physical Sector Format

Byte	Defect Descriptors
0-2	(MSB) Cylinder Number of Defect (LSB)
3	Head Number of Defect
4-7	(MSB) Defective Sector Number (LSB)

The Defect List Format field specifies the format of the defect list data returned by the Target.

The Defect List Length field specifies the length in bytes of the defect descriptors that follow. The Defect List Length is equal to eight times the number of defect descriptors.

Normally the Target will set the Defect List Length field to the amount of space needed to contain the entire defect list. However, the Target is capable of building a defect list with a length such that the entire list cannot be transferred using the maximum allocation length. If the defect list grows beyond 8191 entries, the defect data cannot be transferred with an allocation length of 0FFFFh. The Target will transfer a partial defect list and return Check Condition status with the sense key set to Recovered Error and the additional sense code set to Partial Defect List Transferred. The defect list length will be set to 0FFF8h, indicating the maximum number of defect descriptors that can be transferred. Defects beyond this number cannot be read by the Initiator.

8.26 READ DEFECT DATA (12) - (B7)

Table 209 READ DEFECT DATA (12) - (B7)

Byte	Bit							
	7	6	5	4	3	2	1	0
0	Command Code = B7h							
1	Reserved = 0			Plist	Glist	Defect List Format		
2-5	Reserved = 0							
6-9	(MSB) Allocation Length (LSB)							
10	Reserved = 0							
11	VU = 0		Reserved = 0				FLAG	LINK

(See Section 8.25 “READ DEFECT DATA (10) - (37)READ DEFECT DATA (10) - (37)”)

8.26.1 Defect List Header

Table 210 Unit Defect List Header

Byte	Bit							
	7	6	5	4	3	2	1	0
	Defect List Header							
0	Reserved = 0							
1	Reserved = 0			Plist	Glist	Defect List Format		
2-3	Reserved = 0							
4-7	(MSB) Defect List length (LSB)							

(See Defect List Header for READ DEFECT DATA (10) - (37) in Section 8.25.1 "Defect List Header".)

8.26.2 Defect List Descriptor

Table 211 Defect List Descriptor

Byte	Bit							
	7	6	5	4	3	2	1	0
	Defect List Header							
0-7	Defect Descriptor 0							
8n - (8n+7)	Defect Descriptor n							

(See Defect List Descriptor for READ DEFECT DATA (10) - (37) in Section 8.25.2 "Defect List Descriptor".)

8.26.3 Bytes from Index Format (100b)

Table 212 Defect Descriptors of Bytes from Index Format

Byte	Defect Descriptors
0-2	(MSB) Cylinder Number of Defect (LSB)
3	Head Number of Defect
4-7	(MSB) Defect Bytes from Index (LSB)

Defect Bytes from Index is derived using the following equation:

Bytes from Index = (Physical Sector Number) + N

where N = Bytes per sector.

8.26.4 Physical Sector Format (101b)

Table 213 Defect Descriptors of Physical Sector Format

Byte	Defect Descriptors
0-2	(MSB) Cylinder Number of Defect (LSB)
3	Head Number of Defect
4-7	(MSB) Defective Sector Number (LSB)

8.27 READ LONG (10) - (3E)

Table 214 READ LONG (10) - (3E)

Byte	Bit							
	7	6	5	4	3	2	1	0
0	Command Code = 3Eh							
1	Reserved = 0					PBLOCK	Correct = 0	Obsolete
2-5	(MSB) Logical Block Address (LSB)							
6	Reserved = 0							
7-8	(MSB) Byte Transfer Length (LSB)							
9	VU = 0		Reserved = 0				FLAG	LINK

The READ LONG command requests the drive to transfer one block of data to the Initiator. The transfer data includes data and MEDC field data.

If there is more than one logical block per physical block (i.e., the LOGICAL BLOCKS PER PHYSICAL BLOCK EXPONENT field in the READ CAPACITY (16) parameter data (see 8.24.1) is set to a non-zero value), then:

a) the device server shall support the physical block (PBLOCK) bit;

b) a PBLOCK bit set to one specifies that the device server shall return the entire physical block containing the specified logical block; and

c) a PBLOCK bit set to zero specifies that the device server shall return bytes representing only the specified logical block.

If there are one or more physical blocks per logical block (i.e., the LOGICAL BLOCKS PER PHYSICAL BLOCK EXPONENT field in the READ CAPACITY (16) parameter data (see 8.24.1) is set to zero), and the PBLOCK bit is set to one, then the device server shall terminate the command with CHECK CONDITION status with the sense key set to ILLEGAL REQUEST and the additional sense code set to INVALID FIELD IN CDB.

- **Correct** transferred bit of zero causes correction to be attempted, data will be returned without reporting media errors regardless of the drives ability to successfully make corrections. When this bit is set the drive will return media errors if correction is not successful.
- **Logical Block Address** field specifies the logical block at which the read operation shall occur.
- **Byte Transfer Length** field must specify exactly the number of bytes of data that are available for transfer. If a non-zero byte transfer length does not match the available data length, the Target terminates the command with **Check Condition** status, the sense key is set to *Illegal Request*, and an additional sense code set to *Invalid Field in CDB*. The valid and ILI bits are set to one and the information field is set to the difference of the requested length minus the actual length in bytes. Negative values are indicated by two's complement notation.

The transfer length is calculated as follows:

transfer length = logical block size

The data read by this command is neither read from nor retained in the cache. Data returned by this command cannot be corrupted and transferred on a subsequent WRITE LONG command to create recoverable media errors.

8.28 READ LONG (16) - (9E)

Table 215 READ LONG (16) - (9E)

Byte	Bit							
	7	6	5	4	3	2	1	0
0	Command Code = 9Eh							
1	Reserved = 0			Service Action (11h)				
2-9	(MSB) Logical Block Address (LSB)							
10-11	Reserved = 0							
12-13	(MSB) Byte Transfer Length (LSB)							
14	Reserved = 0						PBLOCK	CORRCT
15	VU = 0		Reserved = 0				FLAG	LINK

The READ LONG command requests the drive to transfer one block of data to the Initiator. The transfer data includes data and MEDC field data.

If there is more than one logical block per physical block (i.e., the LOGICAL BLOCKS PER PHYSICAL BLOCK EXPONENT field in the READ CAPACITY (16) parameter data (see 8.24.1) is set to a non-zero value), then:

a) the device server shall support the physical block (PBLOCK) bit;
b) a PBLOCK bit set to one specifies that the device server shall return the entire physical block containing the specified logical block; and
c) a PBLOCK bit set to zero specifies that the device server shall return bytes representing only the specified logical block.

If there are one or more physical blocks per logical block (i.e., the LOGICAL BLOCKS PER PHYSICAL BLOCK EXPONENT field in the READ CAPACITY (16) parameter data (see 8.24.1) is set to zero), and the PBLOCK bit is set to one, then the device server shall terminate the command with CHECK CONDITION status with the sense key set to ILLEGAL REQUEST and the additional sense code set to INVALID FIELD IN CDB.

- **Correct** transferred bit of zero causes correction to be attempted, data will be returned without reporting media errors regardless of the drives ability to successfully make corrections. When this bit is set the drive will return media errors if correction is not successful.
- **Logical Block Address** field specifies the logical block at which the read operation shall occur.
- **Byte Transfer Length** field must specify exactly the number of bytes of data that are available for transfer. If a non-zero byte transfer length does not match the available data length, the Target terminates the command with **Check Condition** status, the sense key is set to *Illegal Request*, and an additional sense code set to *Invalid Field in CDB*. The valid and ILI bits are set to one and the information field is set to the difference of the requested length minus the actual length in bytes. Negative values are indicated by two's complement notation.

  The transfer length is calculated as follows:

  transfer length = logical block size

The data read by this command is neither read from nor retained in the cache. Data returned by this command can not be corrupted and transferred on a subsequent WRITE LONG command to create recoverable media errors.

8.29 REASSIGN BLOCKS (07)

Table 216 REASSIGN BLOCKS (07)

Byte	Bit							
	7	6	5	4	3	2	1	0
0	Command Code = 07h							
1	Reserved = 0						LONGLBA	Reserved = 0
2-4	Reserved = 0							
5	VU = 0		Reserved = 0				FLAG	LINK

The REASSIGN BLOCKS command requests the drive to reassign a logical block to an available spare. The REASSIGN BLOCKS command attempts to allocate spare blocks on a spare track. The LBA is transferred to the drive during the DATA OUT phase. One to four blocks may be specified for relocation per REASSIGN BLOCKS command.

Reassignment is complete upon the completion of the REASSIGN BLOCKS command. At this time, the defective logical block address has been added to the Glist.

All data is preserved during a reassign command except for the target LBA data. The Mode Page 0h DRRT (Disable Restore Reassign Target) bit determines if the reassign blocks command will attempt to recover the Target LBA data. If the Target cannot recover the data at the Target LBA then the Initiator will have to restore the data after the REASSIGN BLOCKS command completes successfully.

If the reassignment begins to move data and is interrupted or fails to complete successfully, the Target enters a degraded mode of operation. In this mode data can be read but writing to the drive is prohibited.

If the REASSIGN BLOCK command is issued to a location that has not yet been written in sequential write required zone ILLEGAL_REQUEST is returned.

Upon successful completion of this command, the location of the physical sectors reassigned during the command are added to the Glist. The reassigned sectors are marked defective and cannot be accessed again until after a format operation discards the Glist.

- **LONGLBA** bit of zero indicates that LBAs in the provided defect list are 4-bytes. A LONGLBA bit of one indicates that the LBAs in the provided defect list are 8-bytes

Following is the format of the data sent by the Initiator during the DATA OUT phase.

Table 217 Format of Reassign Blocks Parameter List data

Byte	Bit							
	7	6	5	4	3	2	1	0
0-1	Reserved = 0							
2-3	(MSB) Defect List Length (LSB)							
4-n	Defect LBA List							

- **Defect List Length** is the total number of bytes in the Defective LBA List (n - 4).
- **Defective LBA List** is a list of Logical Block Addresses to be reassigned. The number of bytes describing each LBA is determined by the LONGLBA field in the command block.

8.30 RECEIVE DIAGNOSTICS RESULTS (1C)

Table 218 RECEIVE DIAGNOSTIC RESULTS (1C)

Byte	Bit							
	7	6	5	4	3	2	1	0
0	Command Code = 1Ch							
1	Reserved = 0			Reserved = 0				PCV
2	Page Code							
3 4	(MSB) Allocation Length (LSB)							
5	VU = 0		Reserved = 0				FLAG	LINK

The RECEIVE DIAGNOSTIC RESULTS command requests that analysis data requested by a SEND DIAGNOSTIC command be sent to the Initiator.

- **PCV** (Page Code Valid) bit of zero indicates that the most recent SEND DIAGNOSTIC command shall define the data returned by this command. PCV bit of one indicates that the contents of the Page Code field shall define the data returned by this command.
- **Allocation Length** specifies the amount of data to be returned to the Initiator. This value may be zero and this is not considered an error. The Target terminates the Data in phase when all available data has been transferred or when the number of bytes transferred equals the Parameter List Length.

8.30.1 Receive Diagnostic Results Page 0

This page contains a list of supported pages.

Table 219 Receive Diagnostic Results page 0

Byte	Bit							
	7	6	5	4	3	2	1	0
0	Page Code = 0							
1	Reserved = 0							
2-3	Page Length = 04h							
4	(Supported Pages) Page = 0h							
5	CJTPAT page = 3Fh							
6	Translate address page = 40h							
7	Rebuild Assist support page = 42h							

The supported diagnostic page returns a list of supported pages in ascending order.

8.30.2 Receive Diagnostic Results Page 40

Using the SEND DIAGNOSTIC command, an address in either physical or logical format is supplied to the drive. This page is then used to retrieve the address translated into the other format.

Table 220 Receive Diagnostic Results page 40

Byte	Bit							
	7	6	5	4	3	2	1	0
0	Page Code = 40h							
1	Reserved = 0							
2-3	Page Length							
4	Reserved = 0					Supplied Format		
5	RA	ALTS	ALTT	Reserved=0		Translate Format		
6-13	Translated Address							

- **Page Length** is set to 02h if the address is in a Reserved Area (RA =1). Otherwise, Page Length is set to 0Ah.
- **Supplied Format** is the value supplied by the SEND DIAGNOSTIC command; it may be 1of the 3 following values:
  - **000b** Short Block format
  - **011b** Long Block format
  - **100b** Bytes From Index format
  - **101b** Physical Sector format
- **Translate Format** is the value supplied by the SEND DIAGNOSTIC command and specifies the format in which the address has been translated into List. If the Supplied Format is the Short Block or Long Block format, the Translate Format must be either Bytes from Index or Physical Sector format. If the Supplied Format is the Bytes from Index or Physical Sector format, the Translate Format must be Long Block format. Otherwise the Target will terminate the command with **Check Condition** status.
- **RA (Reserved Area)** is set to one if the translated block is an inaccessible sector, which could reflect a defect, an unused sector on a spare cylinder, or a sector beyond the Maximum Customer LBA.
- **ALTS (Alternate Sector)** is set to one if the translated block is a sector in a spare cylinder that points to a reassigned customer sector.
- **ALTT (Alternate Track)** is not used.
- **Translated Address** contains the address in the Translate Format. For a physical format it is as follows:

Table 221 Translated address

Byte	Bit							
	7	6	5	4	3	2	1	0
6-8	Cylinder Number							
9	Head Number							
10-13	Sector Number or Bytes from Index							

- The translation for a logical to physical request for an address currently residing in non-volatile cache returns invalid Cylinder, Head and Sector (CHS) information since the address does not currently reside on media.

8.31 RELEASE (6) - (17)

Table 222 RELEASE (6) - (17)

Byte	Bit							
	7	6	5	4	3	2	1	0
0	Command Code = 17h							
1	Reserved = 0			3rdPty=0	3rd Party ID			Ext=0
2	Reservation Identification							
3-4	Reserved = 0							
5	VU = 0		Reserved = 0				FLAG	LINK

The RELEASE command is used to release a LUN previously reserved. It is not an error for an Initiator to release a LUN that is currently having reservation active and held by other Initiator. The drive returns **Good** status without altering the reservation.

- **3rdPty** must be 0. Third Party reservations are not supported. If the 3rdPty bit is not zero, Check Condition status is returned with a sense key of Illegal Request and additional sense code of Invalid Field in CDB.
- **3rd Party ID** is ignored.
- **Ext**ents must be 0. Extension is not supported by the drive.
- **Reservation Identification** field is ignored.

8.32 RELEASE (10) - (57)

Table 223 RELEASE (10) - (57)

Byte	Bit							
	7	6	5	4	3	2	1	0
0	Command Code = 57h							
1	Reserved = 0			3rdPty=0	Reserved = 0			Ext = 0
2	Reservation Identification							
3	3rd Party Device ID							
4-8	Reserved = 0							
9	VU = 0		Reserved = 0				FLAG	LINK

The RELEASE command is used to release a LUN previously reserved. It is not an error for an Initiator to release a LUN that is currently having reservation active and held by other Initiator. The drive returns **Good** status without altering the reservation.

- **3rdPty** must be 0. Third Party reservations are not supported. If the 3rdPty bit is not zero, Check Condition status is returned with a sense key of Illegal Request and additional sense code of Invalid Field in CDB.
- **Ext**ent must be 0. Extension is not supported by the drive.
- **Reservation Identification** field is ignored.

8.33 REMOVE ELEMENT AND TRUNCATE - (9Eh)

The REMOVE ELEMENT AND TRUNCATE command (see Table 224) requests that the device server depopulate a storage element and truncate the reported capacity of the media.

Table 224 REMOVE ELEMENT AND TRUNCATE command

Byte	Bit							
	7	6	5	4	3	2	1	0
0	Command Code = 9Eh							
1	Reserved = 0							Service Action (18h)
2-9	(MSB) Requested Capacity (LSB)							
10-13	(MSB) Element Identifier (LSB)							
14	Reserved							
15	Control							

The OPERATION CODE field and the SERVICE ACTION field are defined in SPC-5 and shall be set to the values shown in Table 224 for the REMOVE ELEMENT AND TRUNCATE command.

The REQUESTED CAPACITY field specifies the capacity in logical blocks (i.e. one greater than the number of logical blocks returned by the READ CAPACITY command) of the media upon completion of the command. A value of zero specifies that the device server shall choose the resultant capacity of the media. If the device server is unable to set the capacity of the medium to the specified value, then the device server shall:

a) not change the capacity of the media; and
b) terminate the command with CHECK CONDITION status with the sense key set to ILLEGAL REQUEST and the additional sense code set to INVALID FIELD IN CDB.

The ELEMENT IDENTIFIER field specifies the element identifier associated with the storage element to be depopulated. If the ELEMENT IDENTIFIER field specifies a physical element that is not a storage element, (i.e. the PHYSICAL ELEMENT TYPE field is not set to 01h in the corresponding physical element status descriptor) or specifies a physical element not supported by the device, then the device server shall terminate the command with CHECK CONDITION status with the sense key set to ILLEGAL REQUEST and the additional sense code set to INVALID FIELD IN CDB.

If a depopulate operation, a truncate operation, or an initialization initiated by the REMOVE ELEMENT AND TRUNCATE command does not complete successfully, then the logical unit may become format corrupt. Format corrupt shall be cleared by a format operation that completes without error (see 4.35.3). If the logical unit is format corrupt due to a depopulate operation, a truncate operation, or an initialization initiated by the REMOVE ELEMENT AND TRUNCATE command, then the device server shall terminate any medium access command with CHECK CONDITION status, with the sense key set to MEDIUM ERROR and the additional sense code set to DEPOPULATION FAILED.

If deferred microcode has been saved and not activated (see SPC-5), then the device server shall terminate this command with CHECK CONDITION status with the sense key set to NOT READY and the additional sense code set to LOGICAL UNIT NOT READY, MICROCODE ACTIVATION REQUIRED.

If the device server does not support the depopulation of the specified storage element, then the device server shall terminate this command with CHECK CONDITION status with the sense key set to ILLEGAL REQUEST and the additional sense code set to INVALID FIELD IN CDB.

The CONTROL byte is defined in SAM-5.

8.34 REPORT DEVICE IDENTIFIER (A3/05)

Table 225 REPORT DEVICE IDENTIFIER (A3/05)

Byte	Bit							
	7	6	5	4	3	2	1	0
0	Command Code = A3h							
1	Reserved = 0				Service Action = 05h			
2	Reserved = 0							
3	Reserved = 0							
4-5	(MSB) LUN=0 (LSB)							
6-9	(MSB) Allocation Length (LSB)							
10	Reserved = 0							
11	VU = 0		Reserved = 0				FLAG	LINK

The **REPORT DEVICE IDENTIFIER** command requests that the drive send device identification information to the application client.

The **LUN** contains the logical unit number parameter. This parameter is expected to be zero. Other value for this parameter will cause the command to terminate with a CHECK CONDITION status. The sense key is set to ILLEGAL REQUEST, and the additional sense code is set to INVALID FIELD IN CDB.

The **ALLOCATION LENGTH** field indicates how much space has been reserved for the returned parameter data. If the length is not sufficient to contain all the parameter data, the first portion of the data is returned. This is not considered an error. The actual length of the parameter data is available in the IDENTIFIER LENGTH field in the parameter data. If the remainder of the parameter data is required, the application client should send a new REPORT DEVICE IDENTIFIER command with an ALLOCATION LENGTH field large enough to contain all the data.

The REPORT DEVICE IDENTIFIER parameter list contains a 4-byte field that contains the length in bytes of the parameter list and the logical unit's identifier.

Table 226 Report Device Identifier parameter list

Byte	Bit							
	7	6	5	4	3	2	1	0
0-3	(MSB) Identifier Length = n - 3 (LSB)							
4-n	Identifier							

The IDENTIFIER LENGTH field specifies the length in bytes of the IDENTIFIER field. If the ALLOCATION LENGTH field in the CDB is too small to transfer all of the identifier, the length is not adjusted to reflect the truncation. The identifier length initially equals zero and is changed only by a successful SET DEVICE IDENTIFIER command.

The IDENTIFIER field contains a vendor specific value. The value reported is the last value written by a successful SET DEVICE IDENTIFIER command. The value of the identifier is changed only by a SET DEVICE IDENTIFIER command. The identifier value persist through resets, power cycles, media format operations.

The Target return the same Identifier to all Initiators on all ports.

The execution of a REPORT DEVICE IDENTIFIER requires the enabling of a nonvolatile memory within the logical unit. If the nonvolatile memory is not ready, the drive returns **Check Condition** status rather than wait for the device to become ready. The sense key is set to *Not Ready* and the additional sense data is set as described in the TEST UNIT READY command. This information should allow the application client to determine the action required to cause the drive to become ready.

8.35 REPORT LUNS (A0)

Table 227 REPORT LUNS (A0)

Byte	Bit							
	7	6	5	4	3	2	1	0
0	Command Code = A0h							
1	Reserved							
2	Select Report							
3-5	Reserved							
6-9	(MSB) Allocation Length (LSB)							
10	Reserved							
11	VU = 0		Reserved = 0				FLAG	LINK

The REPORT LUNS command requests that the Target return the known LUN to the Initiator. The REPORT LUNS command should always be available and is unaffected by any reservations.
The Allocation Length must be at least 16 bytes. If the Allocation Length is less than 16 bytes, the Target will return a **Check Condition** status with sense key of *Illegal Reques*t and additional sense code of *Invalid Field in CDB*. If the Allocation Length is not sufficient to contain the LUN values for all configured logical units, the Target shall report as many LUN values as will fit in the specified Allocation Length. This is not considered an error.
The REPORT LUNS command will send the LUN list in the subsequent Data Out Phase. The format of the LUN list is shown in the following table.

Select Report field specifies the types of logical unit addresses that shall be reported.

Table 228 Select Report field

Code	Description
00h	The list shall contain the logical units accessible to the I_T nexus with the following addressing methods (see SAM-5): a) simple logical unit addressing method; b) logical unit addressing method; c) peripheral device addressing method; d) flat space addressing method; e) extended flat space addressing method; and f) long extended flat space addressing method. If there are no logical units to report, the LUN LIST LENGTH field shall be set to zero.
01h	The list shall contain only well known logical units, if any. If there are no well known logical units, the LUN LIST LENGTH field shall be zero.
02h	The list shall contain all logical units accessible to the I_T nexus.
10h	If the device server processing the command is in LUN 0 or the REPORT LUNS well known logical unit, then the list shall contain only administrative logical units (see SAM-5). The LUN LIST LENGTH field shall be set to zero if the device server processing the command is not in: a) LUN 0; or b) the REPORT LUNS well known logical unit. If there are no logical units to report, the LUN LIST LENGTH field shall be set to zero.
11h	If the device server processing the command is in LUN 0 or the REPORT LUNS well known

	logical unit, then the list shall contain only: a) administrative logical units (see SAM-5); b) logical units with the logical unit addressing method at level 1; and c) logical units with single level LUN structure with the following addressing methods (see SAM-5): A) peripheral device addressing method; B) flat space addressing method; C) extended flat space addressing method; and D) long extended flat space addressing method. The LUN LIST LENGTH field shall be set to zero if the device server processing the command is not in: a) LUN 0; or b) the REPORT LUNS well known logical unit. If there are no logical units to report, the LUN LIST LENGTH field shall be set to zero.
12h	If the device server processing the command is in an administrative logical unit, the list shall contain: a) the logical unit processing the command; and b) subsidiary logical units that are contained in the same logical unit conglomerate that contains the logical unit processing the command. The LUN LIST LENGTH field shall be set to zero if the device server processing the command is not in an administrative logical unit. If there are no logical units to report, the LUN LIST LENGTH field shall be set to zero.

Table 229 LUN Reporting parameter list format

Byte	Bit							
	7	**6**	**5**	**4**	**3**	**2**	**1**	**0**
0-3	(MSB) LUN List Length = 8 (LSB)							
4-7	Reserved							
8-15	(MSB) LUN = 0 (LSB)							

The LUN list length shall contain the length in bytes of the LUN list that is available to be transferred. This product only supports one LUN. Therefore, the LUN list length must be set to 8. The only supported LUN is zero.

8.36 REPORT SUPPORTED OPERATION CODES (A3/0C)

Table 230 REPORT SUPPORTED OPERATION CODES (A3/0C)

Byte	Bit							
	7	6	5	4	3	2	1	0
0	Command Code = A3h							
1	Reserved = 0				Service Action = 0Ch			
2	RCTD	Reserved = 0				Reporting Options		
3	Requested Operation Code							
4-5	Requested Service Action							
6-9	Allocation Length							
10	Reserved = 0							
11	VU = 0		Reserved				FLAG	LINK

The REPORT SUPPORTED OPERATION CODES command requests information on commands that the drive supports. The initiator may request a list of all operation codes and service actions supported, or the command support data for a specific command.

RCTD: A return command timeouts descriptor (RCTD) bit set to one specifies that the command timeouts descriptor shall be included in each command descriptor (see section 8.36.1) that is returned or in the one_command parameter data (see section 8.36.2) that is returned. A RCTD bit set to zero specifies that the command timeouts descriptor shall not be included in any parameter data returned.

Reporting Options specifies the information to be returned in the parameter data.

Table 231 Reporting Options

Reporting Options	Description
000b	A list of all operation codes and service actions supported by the drive will be returned in the all_commands parameter data format. The Requested Operation Code field and Requested Service Action field will be ignored.
001b	The command support data for the operation code specified in the Requested Operation Code field will be returned in the one_command parameter data format. The Requested Service Action field will be ignored. If the Requested Operation Code field specifies an operation code that has service actions, Check Condition status will be reported with a sense key of Illegal Request and additional sense code of Invalid Field in CDB.
010b	The command support data for the operation code and service action specified in the Requested Operation Code field and Requested Service Action field will be returned in the one_command parameter data format. If the Requested Operation Code field specifies an operation code that does not have service actions, Check Condition status will be reported with a sense key of Illegal Request and additional sense code of Invalid Field in CDB.
011b	The command support data for the operation code and service action specified in the Requested Operation Code field and Requested Service Action field will be returned in the one_command parameter data format. If: a) the operation code specified by the Request Operation Code field specifies an operation code for which the device server does not implement service actions, the Requested Service Action field is set to 00h, and the command is supported; or b) the operation code specified by the Requested Operation Code field specifies an operation code for which the device server implements service actions and the value in the Requested Service Action field is supported, then the command

	support data shall indicate that the command is supported (i.e., the Support field is set to 011b or 101b). Otherwise, the command support data shall indicate that the command is not supported (i.e., the Support field is set to 001b).
010b-111b	Reserved

Requested Operation Code specifies the operation code of the command to be returned in the one_command parameter data format.

Requested Service Action specifies the service action of the command to be returned in the one_command parameter data format.

Allocation Length specifies the number of bytes that have been allocated for the returned parameter data. If the length is not sufficient to contain all the parameter data, the first portion of the data shall be returned. The actual length of the parameter data may be determined from the Additional Length field in the parameter data.

8.36.1 All_commands parameter data format

The Report Supported Operation Codes all_command parameter data format begins with a four-byte header that contains the length in bytes of the parameter data, followed by a list of supported commands. Each command descriptor contains information about a single supported command CDB (i.e. one operation code and service action combination, or one non-service action operation code).

Table 232 All_command parameter data format

Byte	Bit							
	7	6	5	4	3	2	1	0
0-3	Command Data Length (n-3)							
4	Command Descriptor 0							
N	Command Descriptor X							

Each **Command Descriptor** contains information about a single supported command CDB.

Table 233 Command Descriptor format

Byte	Bit							
	7	6	5	4	3	2	1	0
0-3	Operation Code							
1	Reserved = 0							
2-3	Service Action							
4	Reserved = 0							
5	Reserved = 0						CTDP	Servactv
6-7	CDB Length							
8-19	Command Timeouts Descriptor, if any (see 8.36.3 “Command timeouts descriptor format”)							

Operation Code contains the operation code of a supported command.

Service Action contains a supported service action of the supported operation. If the operation code does not have a service action, the Service Action field will be set to zero.

CTDP: A command timeouts descriptor present bit set to one indicates that the command timeouts descriptor (see 8.36.3 Command timeouts descriptor format) is included in this command descriptor. A CTDP bit set to zero indicates that the command timeouts descriptor is not included in this command descriptor.

Servactv set to zero indicates the operation code does not have service actions and the Service Action field should be ignored. SERVACTV set to one indicates the operation code field has service actions and the contents of the Service Action field are valid.

CDB Length contains the length of the command CDB in bytes.

8.36.2 One_command parameter data format

The Report Supported Operation Codes one_command parameter data format contains information about the CDB and a usage map for bits in the CDB for the command specified by the Reporting Options, Requested Operation Code, and Requested Service Action fields in the Reported Supported Operation Codes CDB.

Table 234 One_command parameter data format

Byte	Bit							
	7	6	5	4	3	2	1	0
0	Reserved = 0							
1	CTDP	Reserved = 0				Support		
2-3	CDB Size (n-3)							
4-n	CDB Usage Data							
n+1 - n+12	Command Timeouts Descriptor, if any (see 8.36.3 “Command timeouts descriptor format”)							

CTDP: A command timeouts descriptor present bit set to one indicates that the command timeouts descriptor **i**s included in this command descriptor. (see section 8.36.3 “Command timeouts descriptor format") A CTDP bit set to zero indicates that the command timeouts descriptor is not included in this command descriptor.

The Support field is defined in the table below.

Table 235 One_command parameter support field

Recording Option	Description
000b	Data about the requested command is not currently available. All data after byte 1 is not valid. A subsequent request for command support data may be successful.
001b	The requested command is not supported. All data after byte 1 is not valid.
010b	Reserved.
011b	The requested command is supported in conformance with the standard.
100b	Reserved
101b	The requested command is supported in a vendor specific manner.
110b-111b	Reserved.

CDB Size contains the size of the CDB Usage Data field in the parameter data, and the number of bytes in the CDB for the command requested.

CDB Usage Data contains information about the CDB for the command requested. The first byte of the CDB Usage Data field contains the operation code for the command. If the command contains a service action, then that service action code is returned in the same location as the Service Action field of the command CDB. All other bytes of the CDB Usage Data field contain a usage map for bits in the CDB for the command requested.

The bits in the usage map have a one-for-one correspondence to the CDB for the command requested. If the drive evaluates a bit in the CDB, the usage map will contain a one in the corresponding bit position. The usage map will contain a zero in the corresponding bit position for any field treated as ignored or reserved.

8.36.3 Command timeouts descriptor format

8.36.3.1 Overview

The command timeouts descriptor (see Table 236) returns time-out information for commands supported by the logical unit based on the time from the start of processing for the command to its reported completion. Values returned in the command timeouts descriptor do not include times that are outside the control of the drive (e.g., prior commands with the IMMED bit set to one in the CDB, concurrent commands from the same or different I_T nexuses, manual unloads, power-on self tests, prior aborted commands, commands that force cache synchronization, delays in the service delivery subsystem).

For commands that cause a change in power condition (Idle/Standby Powersave Modes), values returned in the command timeouts descriptor do not include the power condition transition time (e.g., the time to spinup rotating media).

Values returned in the command timeouts descriptor should not be used to compare products.

Table 236 Command timeouts descriptor format

Byte	Bit							
	7	6	5	4	3	2	1	0
0 - 1	Descriptor Length (0Ah)							
2	Reserved = 0							
3	Command Specific							
4- 7	Nominal Command Processing Time-out							
8 - 11	Recommended Command Time-out							

The DESCRIPTOR LENGTH field indicates the number of bytes that follow in the command timeouts descriptor.

The COMMAND SPECIFIC field contains time-out information (see Table 237) that is specific to one or more commands.

If no command specific time-out information is defined by this or the applicable command standard, the COMMAND SPECIFIC field is reserved.

Table 237 Command timeouts descriptor Command Specific Field usage

Command	Reference
WRITE BUFFER	See Section 8.36.3.2 “WRITE BUFFER: command timeouts descriptor COMMAND SPECIFIC field usage”

8.36.3.2 WRITE BUFFER: command timeouts descriptor COMMAND SPECIFIC field usage

For the WRITE BUFFER command, the COMMAND SPECIFIC field usage is reserved for all modes except the following:

- Download microcode mode (04h);
- Download microcode and save mode (05h);
- Download microcode with offsets mode (06h);
- Download microcode with offsets and save mode (07h);
- Download microcode with offsets and defer activation mode (0Eh) only if the microcode is activated by an event other than an activate deferred microcode mode; and
- Activate deferred microcode mode (0Fh).

If the command timeouts descriptor describes one of the WRITE BUFFER modes listed in this subclause, then the COMMAND SPECIFIC field indicates the maximum time, in one second increments, that access to the SCSI device is limited or not possible through any SCSI ports associated with a logical unit that processes a WRITE BUFFER command that specifies one of the named modes. A value of zero in the COMMAND SPECIFIC field indicates that the no maximum time is indicated.

8.37 REPORT SUPPORTED TASK MANAGEMENT FUNCTIONS (A3/0D)

Table 238 Report Supported Task Management Functions (A3/0D)

Byte	Bit							
	7	6	5	4	3	2	1	0
0	Command Code = A3h							
1	Reserved = 0			Service Action = 0Dh				
2-5	Reserved = 0							
6-9	Allocation Length							
10	Reserved = 0							
11	VU = 0		Reserved = 0				Flag	Link

The REPORT SUPPORTED TASK MANAGEMENT FUNCTIONS command requests information on task management functions supported by the drive.

Allocation Length specifies the number of bytes that have been allocated for the returned parameter data. The allocation length must be at least four. If the allocation length is less than four, Check Condition Status will be returned with sense key of Illegal Request and additional sense code of Invalid Field in CDB.

The format of the returned parameter data is shown below.

Table 239 Report Supported Task Management Functions - returned parameter data

Byte	Bit							
	7	6	5	4	3	2	1	0
0	ATS	ATSS	CACAS	CTSS	LURS	QTS	TRS	WAKES
1	Reserved					QUAS	QTSS	ITNRS
2	Reserved							
3	Reserved							

ATS (Abort Task) bit set to one indicates that ABORT TASK is supported. An ATS bit of zero indicates that ABORT TASK is not supported.

ATSS (Abort Task Set) bit set to one indicates that ABORT TASK SET is supported. An ATSS bit of zero indicates that ABORT TASK SET is not supported.

CACAS (Clear ACA) bit set to one indicates that CLEAR ACA is supported. A CACAS bit of zero indicates that CLEAR ACA is not supported.

CTSS (Clear Task Set) bit set to one indicates that CLEAR TASK SET is supported. A CTSS bit of zero indicates that CLEAR TASK SET is not supported.

LURS (Logical Unit Reset) bit set to one indicates that LOGICAL UNIT RESET is supported. An LUR bit of zero indicates that LOGICAL UNIT RESET is not supported.

QTS (Query Task) bit set to one indicates that QUERY TASK is supported. A QTS bit of zero indicates that QUERY TASK is not supported.

TRS (Target Reset) bit set to one indicates that TARGET RESET is supported. A TRS bit of zero indicates that TARGET RESET is not supported.

WAKES (Wakeup) bit set to one indicates that WAKEUP is supported. A WAKES bit of zero indicates that WAKEUP is not supported.

A QUERY UNIT ATTENTION supported (QUAS) bit set to one indicates the QUERY UNIT ATTENTION task management function (see SAM-4) is supported by the logical unit. A QUAS bit set to zero indicates the QUERY UNIT ATTENTION task management function is not supported.

A QUERY TASK SET supported (QTSS) bit set to one indicates the QUERY TASK SET task management function

(see SAM-4) is supported by the logical unit. A QTSS bit set to zero indicates the QUERY TASK SET task management function is not supported.

An I_T NEXUS RESET supported (ITNRS) bit set to one indicates the I_T NEXUS RESET task management function (see SAM-4) is supported by the logical unit. An ITNRS bit set to zero indicates the I_T NEXUS RESET task management function is not supported.

8.38 REQUEST SENSE (03)

Table 240 REQUEST SENSE (03)

Byte	Bit							
	7	6	5	4	3	2	1	0
0	Command Code = 03h							
1	Reserved = 0							DESC
2-3	Reserved = 0							
4	Allocation Length							
5	VU = 0		Reserved = 0				FLAG	LINK

The REQUEST SENSE command requests the drive to transfer sense data.

The Descriptor Format (DESC) bit specifies which sense data format the device shall return in the parameter data. The Allocation Length specifies the maximum number of bytes of sense data that the drive should return. Such relationship is shown in the table below. (See Table 236 for more details).

Table 241 Sense Data Format and Length

DESC Bit	Sense Data Format	Length of Sense Data Returned
0b	Fixed format	The number of bytes in the Allocation Length or 32 bytes, whichever is less
1b	Descriptor format	The number of bytes in the Allocation Length or a fixed "descriptor sense data size", whichever is less. The "descriptor sense data size" is either 40 or 60 bytes, depending on the drive firmware build.

If REQUEST SENSE command with an invalid LUN is received, the drive returns **Good** status and reports a sense key of *Illegal Request* and an additional sense code of *Logical Unit Not Supported*.

If the drive has no sense data available to return, it will return a sense key of *No Sense* and an additional sense code of *No Additional Sense Information*.

Separate sense data is maintained by the device for each Initiator. Therefore, there is no requirement for an Initiator to expeditiously clear a Check Condition as this will not affect other initiators in a multi-Initiator system.

8.39 RESERVE (6) - (16)

Table 242 RESERVE (6) - (16)

Byte	Bit							
	7	6	5	4	3	2	1	0
0	Command Code = 16h							
1	Reserved = 0			3rdPty=0	3rd Party ID			Ext=0
2	Reservation Identification							
3-4	(MSB) Extent List Length = 0 (LSB)							
5	VU = 0		Reserved = 0				FLAG	LINK

The RESERVE command is used to reserve a LUN for an Initiator. This reservation is for the Initiator sending the command.

Extents are not supported by the drive. The Ext bit must be zero. If Ext bit is set to one, **Check Condition** status is returned with a sense key of *Illegal Request* and additional sense code of *Invalid Field in CDB*. The Reservation Identification and Extent List Length fields are ignored.

The Reserve command requests that the entire LUN be reserved for the Initiator until

- the reservation is superseded by another valid Reserve command from the Initiator that made the reservation.
- the reservation is released by a RELEASE command from the same Initiator.
- a hard Reset condition occurs.
- a Target Reset message is received from any Initiator.
- a power off/on cycle occurs.

3rdPty must be 0. Third Party reservations are not supported. If the 3rdPty bit is not zero, Check Condition status is returned with a sense key of Illegal Request and additional sense code of Invalid Field in CDB.

3rd Party ID is ignored.

Only the Initiator that issued the Reserve command for a LUN may release the LUN, regardless of the 3rdPty option. This Initiator may also release the LUN by issuing another RESERVE command. This superseding RESERVE command releases the previous reservation when the new reservation is granted.

Reservation queuing is not supported by the drive. If a LUN is reserved and a RESERVE command is issued from a different Initiator, the Target responds with a RESERVATION CONFLICT.

8.40 RESERVE (10) - (56)

Table 243 RESERVE (10) - (56)

Byte	Bit							
	7	6	5	4	3	2	1	0
0	Command Code = 56h							
1	Reserved = 0			3rdPty=0	Reserved			Ext=0
2	Reservation Identification							
3	Third Pay Device ID							
4-6	Reserved = 0							
7-8	(MSB) Extent List Length = 0 (LSB)							
9	VU = 0		Reserved = 0				FLAG	LINK

The RESERVE command is used to reserve a LUN for an Initiator. This reservation is for the Initiator sending the command.

Extents are not supported by the drive. The Ext bit must be zero. If Ext bit is set to one, **Check Condition** status is returned with a sense key of *Illegal Request* and additional sense code of *Invalid Field in CDB*. The Reservation Identification and Extent List Length fields are ignored.

The Reserve command requests that the entire LUN be reserved for the Initiator until

- the reservation is superseded by another valid Reserve command from the Initiator that made the reservation.
- the reservation is released by a RELEASE command from the same Initiator.
- a hard Reset condition occurs.
- a Target Reset message is received from any Initiator.
- a power off/on cycle occurs.

3rdPty must be 0. Third Party reservations are not supported. If the 3rdPty bit is not zero, Check Condition status is returned with a sense key of Illegal Request and additional sense code of Invalid Field in CDB.

Only the Initiator that issued the Reserve command for a LUN may release the LUN, regardless of the 3rdPty option. This Initiator may also release the LUN by issuing another RESERVE command. This superseding RESERVE command releases the previous reservation when the new reservation is granted.

Reservation queuing is not supported by the drive. If a LUN is reserved and a RESERVE command is issued from a different Initiator, the Target responds with a RESERVATION CONFLICT.

8.41 REZERO UNIT (01)

Table 244 REZERO UNIT (01)

Byte	Bit							
	7	6	5	4	3	2	1	0
0	Command Code = 01h							
1	Reserved = 0			Reserved = 0				
2-4	Reserved = 0							
5	VU = 0		Reserved = 0				FLAG	LINK

The REZERO UNIT command requests that the Target seek LBA 0.

8.42 SANITIZE (48)

Table 245 SANITIZE (48)

Byte	Bit							
	7	6	5	4	3	2	1	0
0	Command Code = 48h							
1	Immed	RSVD	AUSE	Service Action				
2-6	Reserved							
7-8	Parameter List Length = 0							
9	CONTROL							

- **Immed** bit is to specify

Table 246 Immed

0	Status is to be returned at the end of the operation.
1	Good status shall always be returned immediately after command has been received. The TEST UNIT READY command may be used to determine when the drive becomes ready.

- **AUSE** bit can be set to 1 to allow EXIT FAILURE MODE service action on a subsequent SANITIZE. If AUSE is set to 0, and the sanitize fails, a subsequent SANITIZE with EXIT FAILURE MODE will be rejected.
- **Parameter List Length** must be 0. If not, the drive returns a Check Condition status. The sense key is set to Illegal Request and the additional sense data is set to Invalid Field in CDB.
- **CONTROL** byte is defined in SAM-5.

8.42.1 Sanitize (48) Service Action Codes

The following service action codes are implemented. If a reserved service action code is specified, the drive returns a Check Condition status. The sense key is set to Illegal Request and the additional sense data is set to Invalid Field in CDB.

Table 247 SANITIZE Service Action Codes

Code	Name	Descriptions
00-01h	Reserved	Returns Check Condition
01h	Overwrite	Causes the drive to alter information by writing a data pattern to the medium one or more times
02h	Reserved	Returns Check Condition
03h	Cryptographic Erase	Alters the drive internal encryption key to make user data/information unreadable
04h-1Eh	Reserved	Returns Check Condition
1Fh	Exit Failure Mode	If a prior Sanitize operation was issued with AUSE = 1 and it failed, this will take the drive out of degraded mode, Sanitize Failed state.

Table 248 Parameter List Format for Overwrite Service Action

Byte	Bit							
	7	6	5	4	3	2	1	0
0	Invert	Test		Overwrite Count				
1	Reserved							
2	(MSB)							
3	Initialization Pattern Length (n - 3)							(LSB)
4	Initialization Pattern							
...								
n								

- **Invert** bit set to zero indicates that the initialization pattern and protection information bytes, if any, are written as specified in the Initialization Pattern field on each overwrite pass. If the Invert bit is set to one, then the initialization pattern and protection information bytes, if any, shall be inverted (i.e., each bit XORed with one) between consecutive overwrite passes.
- **Overwrite Count** field specifies the number of overwrite passes to be performed. The value of 00h is reserved.
- **Initialization Pattern Length** field specifies the length in bytes of the Initialization Pattern field. The Initialization Pattern Length field shall be greater than zero and shall not exceed the logical block length. If the Initialization Pattern Length field is set to zero or a value greater than the logical block length, then the drive shall terminate the command with Check Condition status with the sense key set to Illegal Request and the additional sense code set to Invalid Field in Parameter List.
- **Initialization Pattern field** specifies the data pattern to be used to write the user data. This data pattern is repeated as necessary to fill each logical block. For each logical block, the first byte of the user data shall begin with the first byte of the initialization pattern. The protection information, if any, shall be set to FFFF_FFFF_FFFF_FFFFh

8.43 SECURITY PROTOCOL IN (A2)

Table 249 SECURITY PROTOCOL IN (A2)

Byte	Bit							
	7	6	5	4	3	2	1	0
0	OPERATION CODE (A2h)							
1	SECURITY PROTOCOL							
2 - 3	SECURITY PROTOCOL SPECIFIC							
4	INC_512	Reserved						
5	Reserved							
6-9	(MSB) ALLOCATION LENGTH (LSB)							
10	Reserved							
11	CONTROL							

The SECURITY PROTOCOL IN command requests the device server to return security protocol information or the results of one or more SECURITY PROTOCOL OUT commands.

The SECURITY PROTOCOL field specifies which security protocol is being used.

Table 250 SECURITY PROTOCOL field in SECURITY PROTOCOL IN command

Code	Description
00h	Security Protocol Information
01h to 06h	Defined by TCG
07h to FFh	Reserved

The contents of the SECURITY PROTOCOL SPECIFIC field are defined by the protocol specified by the SECURITY PROTOCOL field (see Table 250 above).

A 512 increment (INC_512) bit set to one specifies that the ALLOCATION LENGTH field expresses the maximum number of bytes available to receive data in increments of 512 bytes (e.g., a value of one means 512 bytes, two means 1024 bytes, etc.). Pad bytes may or may not be appended to meet this length. Pad bytes shall have a value of 00h. An INC_512 bit set to zero specifies that the ALLOCATION LENGTH field expresses the maximum number of bytes available to receive data in increments of one byte.

Indications of data overrun or underrun and the mechanism, if any, for processing retries are defined by the protocol specified by the SECURITY PROTOCOL field (see Table 250).

The CONTROL byte is defined in SAM-5.

Any association between a previous SECURITY PROTOCOL OUT command and the data transferred by a SECURITY PROTOCOL IN command depends on the protocol specified by the SECURITY PROTOCOL field (see Table 250). If the device server has no data to transfer (e.g., the results for any previous SECURITY PROTOCOL OUT commands are not yet available), then the device server may transfer data indicating it has no other data to transfer.

The format of the data transferred depends on the protocol specified by the SECURITY PROTOCOL field (see Table 250).

The device server shall retain data resulting from a SECURITY PROTOCOL OUT command, if any, until one of the following events is processed:

a) transfer of the data via a SECURITY PROTOCOL IN command from the same I_T_L nexus as defined by the protocol specified by the SECURITY PROTOCOL field (see Table 250);

b) Logical unit reset (see SAM-5); or

c) I_T nexus loss (see SAM-5) associated with the I_T nexus that sent the SECURITY PROTOCOL OUT command

8.44 SECURITY PROTOCOL OUT (B5)

Table 251 SECURITY PROTOCOL OUT (B5)

Byte	Bit							
	7	6	5	4	3	2	1	0
0	OPERATION CODE (B5h)							
1	SECURITY PROTOCOL							
2 - 3	SECURITY PROTOCOL SPECIFIC							
4	INC_512	Reserved						
5	Reserved							
6-9	(MSB) TRANSFER LENGTH (LSB)							
10	Reserved							
11	CONTROL							

The SECURITY PROTOCOL OUT command (see Table 251) requests the device server to process the specified parameter list using the specified security protocol. Depending on the protocol specified by the

SECURITY PROTOCOL field, the application client may use the SECURITY PROTOCOL IN command (see Table 249) to retrieve data that results from the processing of one or more SECURITY PROTOCOL OUT commands.

The SECURITY PROTOCOL field specifies which security protocol is being used.

Table 252 SECURITY PROTOCOL field in SECURITY PROTOCOL OUT command

Code	Description
00h	Reserved
01h to 06h	Defined by TCG
07h to FFh	Reserved

The contents of the SECURITY PROTOCOL SPECIFIC field are defined by the protocol specified by the SECURITY PROTOCOL field (see Table 250 above).

A 512 increment (INC_512) bit set to one specifies that the ALLOCATION LENGTH field expresses the number of bytes to be transferred in increments of 512 bytes (e.g., a value of one means 512 bytes, two means 1024 bytes, etc.). Pad bytes shall be appended as needed to meet this requirement. Pad bytes shall have a value of 00h.

A INC_512 bit set to zero specifies that the TRANSFER LENGTH field indicates the number of bytes to be transferred.

The CONTROL byte is defined in SAM-5.

Any association between a SECURITY PROTOCOL OUT command and a subsequent SECURITY

PROTOCOL IN command is defined by the protocol specified by the SECURITY PROTOCOL field (see Table 252).

Each protocol shall define whether:

a) the device server shall complete the command with GOOD status as soon as it determines the data has been correctly received. An indication that the data has been processed is obtained by sending a SECURITY PROTOCOL IN command and receiving the results in the associated data transfer; or
b) the device server shall complete the command with GOOD status only after the data has been successfully processed and an associated SECURITY PROTOCOL IN command is not required.

The format of the data transferred depends on the protocol specified by the SECURITY PROTOCOL field (see Table 252).

8.45 SEND DIAGNOSTIC (1D)

Table 253 SEND DIAGNOSTIC (1D)

Byte	Bit							
	7	6	5	4	3	2	1	0
0	Command Code = 1Dh							
1	Function Code			PF	RSVD =0	SlfTst	Dev0fl	Unt0fl
2	Reserved = 0							
3-4	(MSB) Parameter List Length (LSB)							
5	VU = 0		Reserved = 0				FLAG	LINK

The SEND DIAGNOSTIC command requests the drive to perform its self-diagnostic test or to perform a function based on a page of information sent in a Data Out phase during the command.

- **PF (Page Format)** bit set to one indicates the data sent by the Initiator conform to the page structure as specified in SCSI standard. This bit is ignored by the Target if the SlfTst bit is set.
- **SlfTst** set to one indicates that the device performs its default self-test. If SlfTst is one, the Function code field is ignored. If SlfTst is set to zero, the action to perform is specified in Function code field.

Table 254 SEND DIAGNOSTIC Function Code (1D)

Value		Function name	Description
000b		NA	Value to be used when the SlfTst bit is set to one or if the SEND DIAGNOSTIC command is not invoking one of the other self-test function codes.
001b		Background Short self-test	The drive starts its short self-test routine in background mode.
010b		Background extended self-test	The drive starts its extended self-test routine in background mode.
011b		NA	Reserved.
100b		Abort background self-test	Abort the current self-test in the background mode. This value is only valid if a previous SEND DIAGNOSTIC command specified a background self-test function and that function has not been completed.
101b		Foreground short self-test	The drive starts its short self-test routine in the foreground mode. This self-test will complete in two minutes or less.
110b		Foreground extended self-test	The drive starts its extended self-test routine in the foreground mode .The completion time for this test is reported in Mode Page 0Ah (refer to section 8.11.9 “Mode Page 0A (Control Mode Page Parameters)”).
111b		Reserved.	

- **DevOfl** is ignored by the Target for compatibility.
- **UntOfl** is ignored by the Target for compatibility.
- **Parameter List Length** must be 0 when the SlfTst bit is one. Otherwise, **Check Condition** status will be generated with a sense key of *Illegal Request* and additional sense of *Invalid Field in CDB*. If the SlfTst bit is

zero, it should be set to the length of the page to be transferred in the DATA OUT phase of the command. If it does not match the expected length of the page a **Check Condition** status will be also generated with a sense key of *Illegal Request* and additional sense of *Invalid Field in CDB*.

If the motor is not running at the correct speed when the command is received, it is rejected by a **Check Condition** status with a *Not Ready* sense key.

If a fault is detected during the default or foreground self-test, a **Check Condition** is reported as an end status. If a fault is detected during the background self-test, it is logged in the log page for later retrieval by a LOG SENSE command.

See Section 10.12 Diagnostics for a detailed listing of operations carried out by the SEND DIAGNOSTIC command and Power on Diagnostics.

8.45.1 Send Diagnostic Page 0

This page requests that the drive return a list of supported pages on the next RECEIVE DIAGNOSTICS command.

Table 255 Diagnostic page 0

Byte	Bit							
	7	6	5	4	3	2	1	0
0	Page Code = 0							
1	Reserved = 0							
2 - 3	Page Length = 0							

8.45.2 Send Diagnostic Page 3F

Table 256 Diagnostic page 3F

Byte	Bit							
	7	6	5	4	3	2	1	0
0	Page Code = 3F							
1	Reserved = 0				Protocol Identifier = 6			
2–3	Page Length = 1Ch							
4	Phy Identifier							
5	Phy Test Function							
6	Phy Test Pattern							
7	Rsvd=0	Phy Test Pattern SATA = 0	Phy Test Pattern SSC	Phy Test Pattern Physical Link Rate				
8 – 10	Reserved = 0							
11	Phy Test Pattern Dwords Control							
12–19	Phy Test Pattern Dwords							
20–31	Reserved = 0							

- Phy Identifier specifies the selected phy that is to perform or to stop performing a phy test function. If the phy does not exist, Check Condition status will be returned with a sense key of Illegal Request and additional sense of Invalid Field in Parameter List.
- Phy Test Function specifies the phy test function to be performed. If an unsupported function is requested, Check Condition status will be returned with a sense key of Illegal Request and additional sense of Invalid Field in Parameter List.

Table 257 Phy Test Function

Phy Test Function	Description
00h	If the selected phy is performing a phy-test function, then the selected phy stop performing the phy test function and originate a link reset sequence. If the selected phy is not performing a phy test function, then this function as no effect on the selected phy.
01h	If the selected phy is not performing a phy test function, the selected phy will be set to transmit the phy test pattern specified by the Phy Test Pattern field at the physical link rate specified by the Phy Test Pattern Physical
02h-FDh	Unsupported
FEh	Analog Loopback - If the selected phy is not performing a phy test function, the selected phy will be set to retransmit the data pattern received by the phy receiver without retime
FFh	Retime Loopback- If the selected phy is not performing a phy test function, the selected phy will be set to retransmit the retimed data pattern received by the phy receiver

- **Phy Test Pattern** specifies the phy test pattern to be transmitted when the Phy Test Function is set to 01h. If an unsupported value is specified, Check Condition status will be returned with a sense key of Illegal Request and additional sense of Invalid Field in Parameter List.

Table 258 Phy Test Pattern

Phy Test Pattern	Description
00h	Reserved
01h	JTPAT
02h	CJTPAT
03h-0Fh	Reserved
10h	TRAIN
11h	TRAIN_DONE
13h	SCRAMBLE_0
12h	IDLE
14h - 3Fh	Reserved
40h	TWO_DWORDS
41h – Efh	Reserved
F0h	PRBS7 (DC un-balanced version)
F1h-FFh	Reserved

- **Phy Test Pattern Physical Link Rate** specifies the physical link rate at which the phy test pattern shall be transmitted. Supported values are 8h for 1.5 Gbps, 9h for 3.0 Gbps, Ah for 6.0 Gbps and Bh for 12Gbps. If an unsupported value is specified, Check Condition status will be returned with a sense key of Illegal Request and additional sense of Invalid Field in Parameter List.
- **Phy Test Pattern SATA** bit set to 0 indicates that the phy transmits the phy test pattern as a SAS phy. If this bit is set to 1, Check Condition status will be returned with a sense key of Illegal Request and additional sense of Invalid Field in Parameter List
- **Phy Test Pattern SSC** field specifies the SSC modulation type which the phy test pattern will be transmitted. If an unsupported SSC modulation type is specified, Check Condition status will be returned with a sense key of Illegal Request and additional sense of Invalid Field in Parameter List.

Table 259 Phy Test Pattern SSC Code

Phy Test Pattern SSC Code	Description
00h	No SSC
01h	Center-spreading SSC (Not supported)
10h	Down-spreading SSC
11h	Reserved

- **Phy Test Pattern Dwords Control** controls whether the bytes in the Phy Test Pattern Dwords field are sent as control characters or data characters.

Table 260 Phy Test Pattern Dwords Control

Phy Test Pattern Dwords Control	Description
00h	Each byte in the Phy Test Pattern Dwords field shall be sent as a data character (i.e., Dxx.y) without scrambling.
08h	The fifth byte in the Phy Test Pattern Dwords field shall be sent as a control character (i.e., Kxx.y). Each other byte shall be sent as a data character without scrambling.
80h	The first byte in the Phy Test Pattern Dwords field shall be sent as a control character. Each other byte shall be sent as a data character without scrambling.
88h	The first and fifth bytes in the Phy Test Pattern Dwords field shall be sent as a control character. Each other byte shall be sent as a data character without scrambling.
All others	Reserved

- **Phy Test Pattern Dwords** contains the two Dwords that are sent during a TWO_DWORDS test pattern.

8.45.3 Send Diagnostic Page 40

This allows the Initiator to translate a LBA or physical sector address to the other format. The address to be translated is passed to the Target with the SEND DIAGNOSTIC command and the results are returned to the Initiator by the RECEIVE DIAGNOSTICS command. The Target will read the parameter list from the Initiator, and, if no errors are detected in the parameter list, **Good** status will be returned. The data translation will be performed upon receipt of the RECEIVE DIAGNOSTICS command.

Table 261 Diagnostic Page 40

Byte	Bit							
	7	6	5	4	3	2	1	0
0	Page Code = 40h							
1	Reserved = 0							
2 - 3	Page Length = 0Ah							
4	Reserved = 0					Supplied Format		
5	Reserved = 0					Translate Format		
6-13	Address to Translate							

Supplied Format may take one of the following three values:

Table 262 Supplied Format

000b	Short Block format
011b	Long Block format
100b	Bytes From Index format
101b	Physical Sector format

It specifies the format in which the address has been supplied.

- **Translate Format** specifies the format that the address should be translated into. If the Supplied Format is the Short Block format or Long Block format, the Translate format must be either Bytes From Index or Physical Sector format. If the Supplied Format is the Bytes From Index or Physical Sector format, the Translate Format must be Long Block format. If either of the format fields is invalid or they specify the same format, the command will terminate with **Check Condition** status with a sense code of *Illegal Request* and *Illegal Field in Parameter List*.
- **Address to Translate** contains the address to translate. If the Short Block format is specified, the first four bytes of the field (bytes 6 to 9) contain the LBA and the remainder must be zero. If the Long Block format is specified, byte 6 to 13 contain the 64-bit LBA. For the physical format the address must be specified as follows.

Table 263 Address to translate

Byte	Bit							
	7	6	5	4	3	2	1	0
6-8	Cylinder Number							
9	Head Number							
10-13	Sector Number or Bytes from Index							

8.46 SET DEVICE IDENTIFIER (A4/06)

Table 264 SET DEVICE IDENTIFIER (A4/06)

Byte	Bit							
	7	6	5	4	3	2	1	0
0	Command Code = A4h							
1	Reserved = 0				Service Action = 06h			
2	Reserved = 0							
3	Reserved = 0							
4-5	Restricted = 0							
6-9	(MSB) Parameter List Length (LSB)							
10	Reserved = 0							
11	VU = 0		Reserved = 0				FLAG	LINK

The SET DEVICE IDENTIFIER command requests that the device identifier information be set to the value received in the SET DEVICE IDENTIFIER parameter list.

On successful completion of a SET DEVICE IDENTIFIER command a unit attention is generated for all Initiators except the one that issued the service action. When reporting the unit attention condition the additional sense code is set to *Device Identifier Changed*.

- **Parameter List Length** field specifies the length in bytes of the Identifier that is transferred from the host system to the Target. The maximum value for this field is 512 bytes. A parameter list length of zero indicates that no data is transferred, and that subsequent REPORT DEVICE IDENTIFIER commands return an Identifier length of zero.

The SET DEVICE IDENTIFIER parameter list contains the identifier to be set by the addressed logical unit.

Table 265 SET DEVICE IDENTIFIER, Parameter List

Byte	Bit							
	7	6	5	4	3	2	1	0
0-n	Identifier							

The IDENTIFIER field is a vendor specific value, to be returned in subsequent REPORT DEVICE IDENTIFIER commands.

8.47 START STOP UNIT (1B)

Table 266 START STOP UNIT (1B)

Byte	Bit							
	7	6	5	4	3	2	1	0
0	Command Code = 1Bh							
1	Reserved = 0							Immed
2	Reserved = 0							
3	Reserved = 0				Power Condition Modifier			
4	Power Condition				Reserved=0		LoEj= 0	Start
5	VU = 0		Reserved = 0				FLAG	LINK

The START STOP UNIT command is used to spin up or stop the spindle motor.

- **Immed** bit is to specify

Table 267 Immed

0	status is to be returned at the end of the operation.
1	Good status shall always be returned immediately after command has been received. The TEST UNIT READY command may be used to determine when the drive becomes ready after a spin-up.

- **Power Conditions and Power Condition Modifier** fields are used to specify that the logical unit be placed into a power condition or to adjust a timer as defined in Table 268, if this field is set to a value other than 0h, then the START bit shall be ignored.

Table 268 Power Conditions

Power Condition Code	Name	Power Condition Modifier	Description
0h	START_VALID	0h	Process the START bit
1h	ACTIVE	0h	Place the device into the active power condition
2h	IDLE_A	0h	Place the device into the idle-a power condition
2h	IDLE_B	1h	Place the device into the idle-b power condition
2h	IDLE_C	2h	Place the device into the idle-c power condition
3h	STANDBY_Z	0h	Place the device into the standby_Z power condition
3h	STANDBY_Y	1h	Place the device into the standby_Y power condition
4h	Reserved	0h	Reserved
5h	Obsolete	0h-Fh	Obsolete
6h	Reserved	0h	Reserved
7h	LU_CONTROL	0h	Transfer control of power conditions to the logical unit
8h - 9h	Reserved	0h	Reserved
Ah	FORCE_IDLE_A	0h	Force the idle_a condition timer to zero.
Ah	FORCE_IDLE_B	1h	Force the idle_b condition timer to zero.
Ah	FORCE_IDLE_C	2h	Force the idle_c condition timer to zero.
Bh	FORCE_STANDBY_Z	0h	Force the standby_z condition timer to zero.
Bh	FORCE_STANDBY_Y	1h	Force the standby_y condition timer to zero.
all Others	Reserved	0h	Reserved

If the START STOP UNIT command is processed with the POWER CONDITION field set to ACTIVE, IDLE, or STANDBY, then:

a) the logical unit shall transition to the specified power condition; and
b) the drive shall disable the idle condition timer if it is active and disable the standby condition timer if it is active until another START STOP UNIT command is processed that returns control of the power condition to the logical unit, or a logical unit reset occurs.
c) if under initiator control, the two minute floor and 60 head unloads per 24 hour period limits do not apply as they do when under logical unit/timer control

If the START STOP UNIT command is processed with the POWER CONDITION field set to LU_CONTROL, then the drive shall initialize and start all of the idle condition timers and standby condition timers that are supported and enabled.

If the START STOP UNIT command is processed with the POWER CONDITION field set to LU_CONTROL, then the drive shall enable the idle condition timer if it is active and disable the standby condition timer if it is active.

If the START STOP UNIT command is processed with the POWER CONDITION field set to FORCE_IDLE_0 or FORCE_STANDBY_0, then the drive shall:

a) force the specified timer to zero, cause the logical unit to transition to the specified power condition, and return control of the power condition to the drive; or
b) terminate a START STOP UNIT command that selects a timer that is not supported by the drive or a timer that is not active. The drive shall terminate the command with CHECK CONDITION status with the sense key set to ILLEGAL REQUEST and the additional sense code set to INVALID FIELD IN CDB.

It is not an error to specify that the logical unit transition to its current power condition. See 8.11.13 “Mode Page 1A (Power Control)” for more information on idle and standby power conditions.

- **LoEj** is not supported by the drive and must be set to 0.
- **Start** bit is to specify:

Table 269 Start bit

0	Stop the spindle
1	Start the spindle

Note: Once the drive has become ready (after a power on), the START STOP UNIT command can be used without any errors regardless of the state of the motor: stopped or spinning.

8.48 SYNCHRONIZE CACHE (10) - (35)

Table 270 SYNCHRONIZE CACHE (10) - (35)

Byte	Bit							
	7	6	5	4	3	2	1	0
0	Command Code = 35h							
1	Reserved = 0			Reserved = 0			Immed = 0	Obsolete
2-5	(MSB) Logical Block Address (LSB)							
6	Reserved = 0							
7-8	(MSB) Number of Blocks (LSB)							
9	VU = 0		Reserved = 0				FLAG	LINK

The SYNCHRONIZE CACHE command ensures that logical blocks in the cache have their most recent data value recorded on the media.

- **Logical Block Address** is to specify where the operation is to begin.
- **Immed** (immediate) must be zero. An immediate bit of zero indicates that the status shall not be returned until the operation has completed. If the Immed bit is set to one, the drive returns a **Check Condition** status. The sense key shall be set to *Illegal Request* and the additional sense code shall be set to *Invalid Field in CDB*.
- **Number of Blocks** specifies the total number of contiguous logical blocks within the range. Number of Blocks of zero indicates that all remaining logical blocks on the logical unit shall be within the range.

8.49 SYNCHRONIZE CACHE (16) - (91)

Table 271 Synchronize Cache (16) - (91)

Byte	Bit							
	7	6	5	4	3	2	1	0
0	Command Code = 91h							
1	Reserved = 0						Immed = 0	Rsvd=0
2-9	Logical Block Address							
10-13	Number of Blocks							
14	Reserved = 0							
15	VU = 0		Reserved = 0				FLAG	LINK

The SYNCHRONIZE CACHE command ensures that logical blocks in the cache have their most recent data value recorded on the media. See the SYNCHRONIZE CACHE (10) description for definitions of the fields in this command.

8.50 TEST UNIT READY (00)

Table 272 TEST UNIT READY (00)

Byte	Bit							
	7	6	5	4	3	2	1	0
0	Command Code = 00h							
1	Reserved = 0			Reserved = 0				
2-4	Reserved = 0							
5	VU = 0		Reserved = 0				FLAG	LINK

The TEST UNIT READY command allows the Initiator to check if the drive is READY. The SCSI specification defines READY as the condition where the device will accept a media-access command without returning **Check Condition** status.

The drive will first verify that the motor is spinning at the correct speed. If the spindle motor is not spinning at the correct speed, **Check Condition** status is returned with sense key of *Not Ready*. If the motor is spinning at the correct speed, the drive accepts normal media access commands.

The TEST UNIT READY command is not intended as a diagnostic. No self diagnostic is performed by the device as a result of this command.

The TEST UNIT READY command has special significance for power sequencing using the UNIT START command with an immediate bit of one. In this mode the UNIT START command returns **Task Complete** status before the completion of motor spin-up and expects the initiator to issue TEST UNIT READY commands to determine when the motor has reached the proper speed.

*Note: The spindle automatically starts in automatic spin-up mode. The drive does not execute any commands other than TEST UNIT READY, INQUIRY, or REQUEST SENSE command until the Power On sequence is complete. The drive will return **Check Condition** status with Not Ready sense key and In Process of Becoming Ready sense code for all other commands during the Power On period.*

8.51 VERIFY (10) - (2F)

Table 273 VERIFY (10) - (2F)

Byte	Bit							
	7	6	5	4	3	2	1	0
0	Command Code = 2Fh							
1	VRPROTECT			DPO	Reserved = 0	ByteChk		RSVD = 0
2-5	(MSB) Logical Block Address (LSB)							
6	Reserved = 0							
7-8	(MSB) Verification Length (LSB)							
9	VU = 0		Reserved = 0				FLAG	LINK

The VERIFY command requests that the drive verify the data written on the media. A verification length of zero indicates that no data will be transferred. This condition is not considered an error.

Table 274 ByteChk

ByteChk	Function
00b	Indicates that the data is read from the disk and verified using LDPC. If an LDPC error is detected in the verify process, Check Condition status is returned with sense key set to Medium Error.
01b	Indicates that a byte-by-byte comparison is performed between the data on the disk and data transferred from the initiator during the data-out phase. The number of logical blocks transferred must equal the Verification Length field. If the comparison is unsuccessful, the command is terminated with Check Condition status and the sense key is set to Miscompare.
10b	Not defined
11b	Indicates that a byte-by-byte comparison is performed between the data on the disk and data transferred from the initiator during the data-out phase. The number of logical blocks transferred must equal one. All blocks specified by the Verification Length will be compared against the single block of data transferred by the initiator. If the comparison is unsuccessful, the command is terminated with Check Condition status and the sense key is set to Miscompare.

- **DPO** (Disable Page Out) bit of one indicates that the data accessed by this command is to be assigned the lowest priority for being written into or retained by the cache. A DPO bit of one overrides any retention priority specified in the Mode Select Page 8 Caching Parameters. A DPO bit of zero indicates the priority is determined by the retention priority. The Initiator should set the DPO bit when the blocks read by this command are not likely to be read again in the near future.

If caching is enabled, the command performs an implied FUA and an implied Synchronize Cache before starting the VERIFY. This ensures that the medium, not the cache, is being verified.

The command stops on *Check Condition* and reports the LBA in error. The command must be reissued, starting with the next LBA, to verify the remainder of the Drive.

The Verification Length is the number of blocks to check.

The data (if any) from the data-out phase and the data from the media are not retained in the cache. Therefore, the DPO bit has no effect on this command and is ignored.

VRPROTECT defines the manner in which protection information read from disk shall be checked during processing of the command. Protection information is stored on disk, and may be validated using the drive's internal checking

algorithms, and also byte-by-byte compared using data from the initiator when ByteChk=1.

If the drive is not formatted with protection information, VRPROTECT must be set to 000b, else Check Condition status will be returned with sense key of Illegal Request and additional sense code of Invalid Field in CDB.

VRPROTECT=000b

If the drive is not formatted with protection information, only user data is verified.

If the drive is formatted with protection information:

- Logical Block Guard is checked
- Logical Block Application Tag is checked (applies to VERIFY(32) command only)
- Logical Block Reference Tag is checked

VRPROTECT=001b

- Logical Block Guard is checked
- Logical Block Application Tag is checked (applies to VERIFY(32) command only)
- Logical Block Reference Tag is checked

VRPROTECT=010b

- Logical Block Guard is not checked
- Logical Block Application Tag is checked (applies to VERIFY(32) command only)
- Logical Block Reference Tag is checked

VRPROTECT=011b

- Logical Block Guard is not checked
- Logical Block Application Tag is not checked
- Logical Block Reference Tag is not checked

VRPROTECT=100b

- Logical Block Guard is checked
- Logical Block Application Tag is not checked
- Logical Block Reference Tag is not checked

VRPROTECT=101b, 110b, 111b

These values are reserved. Check Condition status will be returned with sense key of Illegal Request and additional sense code of Invalid Field in CDB.

If a check of the protection information fails, Check Condition status will be returned with sense key of Aborted Command and additional sense code indicating which protection field check failed.

If ByteChk=1, the drive's internal checking of protection information is done only when VRPROTECT=000b and the drive is formatted with protection information

If ByteChk=1, and VRPROTECT is not set to 000b, checking of protection information is performed on the fields described above as a byte-by-byte comparison against the data transferred to the drive by the initiator during the Data Out phase.

Refer to the ANSI T10 standards for additional details of protection information.

8.52 VERIFY (12) - (AF)

Table 275 VERIFY (12) - (AF)

Byte	Bit							
	7	6	5	4	3	2	1	0
0	Command Code = AFh							
1	VRPROTECT			DPO	FUA	ByteChk		Reserved = 0
2-5	(MSB) Logical Block Address (LSB)							
6-9	(MSB) Verification Length (LSB)							
10	Reserved = 0							
11	VU = 0		Reserved = 0				FLAG	LINK

The VERIFY (12) command causes the drive to verify data written on the media. See the VERIFY (10) description for the definitions of the fields in this command.

8.53 VERIFY (16) - (8F)

Table 276 VERIFY (16) - (8F)

Byte	Bit							
	7	6	5	4	3	2	1	0
0	Command Code = 08Fh							
1	VRPROTECT			DPO	Reserved = 0	ByteChk		Reserved = 0
2-9	(MSB) Logical Block Address (LSB)							
10-13	(MSB) Verification Length (LSB)							
14	Reserved = 0							
15	VU = 0		Reserved = 0				FLAG	LINK

The VERIFY command requests that the drive verify the data written on the media. See the VERIFY (10) description for the definitions of the fields in this command.

8.54 VERIFY (32) - (7F/0A)

Table 277 VERIFY (32) - 7F/0A)

Byte	Bit							
	7	6	5	4	3	2	1	0
0	Command Code = 07Fh							
1	VU = 0		Reserved = 0				FLAG	LINK
2-5	Reserved = 0							
6	Reserved = 0			Group Number = 0				
7	Additional CDB Length = 18h							
8 – 9	Service Action = 000Ah							
10	RDPROTECT			DPO	Reserved = 0	ByteChk		Reserved=0
11	Reserved = 0							
12 – 19	(MSB) Logical Block Address (LSB)							
20 – 23	(MSB) Expected Initial Logical Block Reference Tag (LSB)							
24 – 25	(MSB) Expected Logical Block Application Tag (LSB)							
26 – 27	(MSB) Logical Block Application Tag Mask (LSB)							
28 – 31	(MSB) Verification Length (LSB)							

The VERIFY command requests that the verify the data written on the media. Each logical block includes user data and may include protection information, based on the VPROTECT field and the drive format.

If the drive is formatted with type 2 protection (PROT_EN=1 and P_TYPE=001b in the READ CAPACITY (16) parameter data), then this command will be processed normally. Any other protection types will result in Check Condition status to be returned with sense key of Illegal Request and additional sense code of Invalid Command Operation Code.

The Expected Initial Logical Block Reference Tag field contains the value of the Logical Block Reference Tag field expected in the protection information of the first logical block accessed by the command.

If the ATO bit is set to one in Mode Page 0Ah, the Logical Block Application Tag Mask field contains a value that is a bit mask for enabling the checking of the Logical Block Application Tag field in the protection information for each logical block accessed by the command. A Logical Block Application Tag Mask bit set to one enables the checking of the corresponding bit of the Expected Logical Block Application Tag field with the corresponding bit of the Logical Block Application Tag field in the protection information.

If the ATO bit is set to zero, the Logical Block Application Tag Mask field and the Expected Logical Block Application Tag field are ignored.

8.55 WRITE (6) - (0A)

Table 278 WRITE (6) - (0A)

Byte	Bit							
	7	6	5	4	3	2	1	0
0	Command Code = 0Ah							
1	Reserved = 0			(MSB)		LBA		
2-3	Logical Block Address (LSB)							
4	Transfer Length							
5	VU = 0		Reserved = 0				FLAG	LINK

The WRITE command requests the drive to write the specified number of blocks of data (Transfer Length) from the Initiator to the medium starting at the specified Logical Block Address (LBA).
See Section 8.17 "READ (6) - (08)" for the parameters.

8.56 WRITE (10) - (2A)

Table 279 WRITE (10) - (2A)

Byte	Bit							
	7	6	5	4	3	2	1	0
0	Command Code = 2Ah							
1	WRPROTECT			DPO	FUA	Rsvd=0	FUA_NV	Obsolete
2-5	(MSB) Logical Block Address (LSB)							
6	Reserved = 0							
7-8	(MSB) Transfer Length (LSB)							
9	VU = 0		Reserved = 0				FLAG	LINK

The WRITE (10) command requests that the drive write the data transferred from the Initiator. This command is processed like the standard WRITE (6) - (0A) command except for the longer transfer length.

- **Transfer Length** is the number of contiguous blocks to be transferred. If the transfer length is zero, the seek occurs, but no data is transferred. This condition is not considered an error.
- **DPO** (Disable Page Out) bit of one indicates that the data accessed by this command is to be assigned the lowest priority for being written into or retained by the cache. A DPO bit of one overrides any retention priority specified in the Mode Select Page 8 Caching Parameters. A DPO bit of zero indicates that the priority is determined by the retention priority. The Initiator should set the DPO bit when the blocks written by this command are not likely to be read in the near future.
- **FUA** (Force Unit Access) bit of one indicates that the Target must write the data to the media before returning **Good** status. A FUA bit of zero indicates that the Target may return **Good** status prior to writing the data to the media.
- **FUA_NV** (Force Unit Access Non-Volatile Cache) may be set to 0 or 1, but is ignored since NV_SUP=0 in Inquiry Page 86h.

If a WRITE (6) command is received after protection information is enabled, the drive will set the protection information as follows as it writes each block to disk:

- the Logical Block Guard field is set to a properly generated CRC
- the Logical Block Reference Tag field is set to:
  - the least significant four bytes of the LBA, if the drive is formatted with type 1 protection (PROT_EN=1 and P_TYPE=000b in the READ CAPACITY (16) parameter data); or
  - FFFFFFFFh, if the drive is formatted with type 2 protection (PROT_EN=1 and P_TYPE=001b in the READ CAPACITY (16) parameter data)
- the Logical Block Application Tag field is set to
  - FFFFh, if the ATO bit is set to one in Mode Page 0Ah; or
  - Any value, if the ATO bit is set to zero

WRPROTECT defines the manner in which protection information written to disk shall be checked during processing of the command. Protection information may be transmitted to the drive with the user data, based on the WRPROTECT bit and the drive format.

If the drive is not formatted with protection information, WRPROTECT must be set to 000b, else Check Condition status will be returned with sense key of Illegal Request and additional sense code of Invalid Field in CDB.

WRPROTECT=000b
Protection information is not transmitted to the drive.

If the drive is formatted with protection information, the drive will write protection information to disk based on its internal algorithms.

WRPROTECT=001b

- Protection information is transmitted to the drive with the user data
- Logical Block Guard is checked
- Logical Block Application Tag is checked (applies to WRITE (32) command only)
- Logical Block Reference Tag is checked

WRPROTECT=010b

- Protection information is transmitted to the drive with the user data
- Logical Block Guard is not checked
- Logical Block Application Tag is checked (applies to WRITE(32) command only)
- Logical Block Reference Tag is checked

WRPROTECT=011b

- Protection information is transmitted to the drive with the user data
- Logical Block Guard is not checked
- Logical Block Application Tag is not checked
- Logical Block Reference Tag is not checked

WRPROTECT=100b

- Protection information is transmitted to the drive with the user data
- Logical Block Guard is checked
- Logical Block Application Tag is not checked
- Logical Block Reference Tag is not checked

WRPROTECT=101b, 110b, 111b, 001b

These values are reserved. Check Condition status will be returned with sense key of Illegal Request and additional sense code of Invalid Field in CDB.

If a check of the protection information fails, Check Condition status will be returned with sense key of Aborted Command and additional sense code indicating which protection field check failed.
Refer to the ANSI T10 standards for additional details of protection information.

8.57 WRITE (12) - (AA)

Table 280 WRITE (12) - (AA)

Byte	Bit							
	7	6	5	4	3	2	1	0
0	Command Code = AAh							
1	WRPROTECT			DPO	FUA	Rsvd=0	FUA_NV	Rsvd=0
2-5	(MSB) Logical Block Address (LSB)							
6-9	(MSB) Transfer Length (LSB)							
10	Reserved=0							
11	VU = 0		Reserved = 0				FLAG	LINK

The WRITE (12) command causes the drive to write data from the initiator to the media. See the WRITE (10) description for the definitions of the fields in this command.

8.58 WRITE (16) - (8A)

Table 281 WRITE(16)-(8A)

Byte	Bit							
	7	6	5	4	3	2	1	0
0	Command Code = 8Ah							
1	WRPROTECT			DPO	FUA	Rsvd=0	FUA_NV	Rsvd=0
2-9	(MSB) Logical Block Address (LSB)							
10-13	(MSB) Transfer Length (LSB)							
14	Reserved = 0							
15	VU = 0		Reserved = 0				FLAG	LINK

The WRITE (16) command causes the drive to write data from the initiator to the media. See the WRITE (10) description for the definitions of the fields in this command.

8.59 WRITE (32) - (7F/0B)

Table 282 WRITE (32) - (7F/0B)

Byte	Bit							
	7	6	5	4	3	2	1	0
0	Command Code = 7Fh							
1	VU = 0		Reserved = 0				FLAG	LINK
2-5	Reserved = 0							
6	Reserved = 0			Group Number = 0				
7	Additional CDB Length = 18h							
8-9	Service Action = 000Bh							
10	WRPROTECT			DPO	FUA	Rsvd=0	FUA_NV	Rsvd=0
11	Reserved = 0							
12-19	(MSB) Logical Block Address (LSB)							
20-23	(MSB) Expected Initial Logical Block Reference Tag (LSB)							
24-25	(MSB) Expected Logical Block Application Tag (LSB)							
26-27	(MSB) Logical Block Application Tag Mask (LSB)							
28-31	(MSB) Transfer Length (LSB)							

The WRITE command requests that the drive write data transferred from the initiator to disk. Each logical block transferred includes user data and may include protection information, based on the WRPROTECT field and the drive format. Each logical block written includes user data and, if the drive is formatted with protection information enabled, protection information.

If the drive is formatted with type 2 protection (PROT_EN=1 and P_TYPE=001b in the READ CAPACITY (16) parameter data), then this command will be processed normally. Any other protection types will result in Check Condition status to be returned with sense key of Illegal Request and additional sense code of Invalid Command Operation Code

The Expected Initial Logical Block Reference Tag field contains the value of the Logical Block Reference Tag field expected in the protection information of the first logical block accessed by the command.

If the ATO bit is set to one in Mode Page 0Ah, the Logical Block Application Tag Mask field contains a value that is a bit mask for enabling the checking of the Logical Block Application Tag field in the protection information for each logical block accessed by the command. A Logical Block Application Tag Mask bit set to one enables the checking of the corresponding bit of the Expected Logical Block Application Tag field with the corresponding bit of the Logical Block Application Tag field in the protection information.

If the ATO bit is set to zero, the Logical Block Application Tag Mask field and the Expected Logical Block Application Tag field are ignored.

8.60 WRITE AND VERIFY (10) - (2E)

Table 283 WRITE AND VERIFY (10) - (2E)

Byte	Bit							
	7	6	5	4	3	2	1	0
0	Command Code = 2Eh							
1	WRPROTECT			DPO	Reserved = 0		Byte Chk	Obsolete
2-5	(MSB) Logical Block Address (LSB)							
6	Reserved = 0							
7-8	(MSB) Transfer Length (LSB)							
9	VU = 0		Reserved = 0				FLAG	LINK

WRITE AND VERIFY command requests that the drive writes the data transferred from the Initiator to the medium and then verify that the data is correctly written. If caching is enabled, an implied FUA (Force Unit Access) and an implied Synchronize Cache are performed before starting the operation. This insures that data from the disk, not the cache, is verified.

- See the WRITE (10) command description for the definition of the WRPROTECT field.
- **Transfer Length** is the number of contiguous blocks to transferred. If the transfer length is zero, the seek occurs, but no data is transferred. This condition is not considered an error.

  If caching is enabled, the command performs an implied FUA and an implied Synchronize Cache before starting the operation. This insures that the medium, not the cache, is being verified.
- **ByteChk** bit set to zero indicates that the data is read back from the disk and verified using LDPC after the successful write operation. If an LDPC error is detected in the verify process, **Check Condition** status is returned with sense key set to *Medium Error*. ByteChk bit set to one indicates that byte-by-byte comparison is performed between data on the disk starting the block specified in LBA field and data transferred from the Initiator.

  If the comparison is unsuccessful, the command is terminated with **Check Condition** status and the sense key is set to *Miscompare*.
- **DPO** (Disable Page Out) bit of one indicates that the data written by this command is to be assigned the lowest priority for being written into or retained by the cache. A DPO bit of one overrides any retention priority specified in the Mode Select Page 8 Caching parameters. A DPO bit of zero indicates the priority is determined by the retention priority.

  The Initiator should set the DPO bit when the blocks written by this command are not likely to be read again in the near future.

8.61 WRITE AND VERIFY (12) - (AE)

Table 284 WRITE AND VERIFY (12) - (AE)

Byte	Bit							
	7	6	5	4	3	2	1	0
0	Command Code = AEh							
1	WRPROTECT			DPO	Reserved = 0		ByteChk	Obsolete
2-5	(MSB) Logical Block Address (LSB)							
6-9	(MSB) Transfer Length (LSB)							
10	Reserved = 0							
11	VU = 0		Reserved = 0				FLAG	LINK

The WRITE AND VERIFY command requests that the drive write the data transferred from the Initiator to the medium and then verify that the data is correctly written. See the WRITE AND VERIFY (10) description for the definitions of the fields in this command.

8.62 WRITE AND VERIFY (16) - (8E)

Table 285 WRITE and VERIFY (16) - (8E)

Byte	Bit							
	7	6	5	4	3	2	1	0
0	Command Code = 8Eh							
1	WRPROTECT			DPO	Reserved = 0		Byte Chk	Obsolete
2-9	(MSB) Logical Block Address (LSB)							
10-13	(MSB) Transfer Length (LSB)							
14	Reserved = 0							
15	VU = 0		Reserved = 0				FLAG	LINK

The WRITE AND VERIFY command requests that the drive write the data transferred from the Initiator to the medium and then verify that the data is correctly written.

8.63 WRITE AND VERIFY (32) - (7F/0C)

Table 286 WRITE and VERIFY (32) - (7F/0C)

Byte	Bit							
	7	6	5	4	3	2	1	0
0	Command Code = 7Fh							
1	VU = 0		Reserved = 0				FLAG	LINK
2–5	Reserved = 0							
6	Reserved = 0			Group Number = 0				
7	Additional CDB Length = 18h							
8–9	Service Action = 000Ch							
10	WRPROTECT			DPO	Reserved = 0		ByteChk	Reserved=0
11	Reserved = 0							
12–19	Logical Block Address							
20–23	Expected Initial Logical Block Reference Tag							
24–25	Expected Logical Block Application							
26–27	Logical Block Application Tag Mask							
28–31	Transfer Length							

The WRITE AND VERIFY command requests that the drive write the data transferred from the initiator to disk and then verify that the data is correctly written.

If the drive is formatted with type 2 protection (PROT_EN=1 and P_TYPE=001b in the READ CAPACITY (16) parameter data), then this command will be processed normally. Any other protection types will result in Check Condition status to be returned with sense key of Illegal Request and additional sense code of Invalid Command Operation Code.

The Expected Initial Logical Block Reference Tag field contains the value of the Logical Block Reference Tag field expected in the protection information of the first logical block accessed by the command.
If the ATO bit is set to one in Mode Page 0Ah, the Logical Block Application Tag Mask field contains a value that is a bit mask for enabling the checking of the Logical Block Application Tag field in the protection information for each logical block accessed by the command. A Logical Block Application Tag Mask bit set to one enables the checking of the corresponding bit of the Expected Logical Block Application Tag field with the corresponding bit of the Logical Block Application Tag field in the protection information.
If the ATO bit is set to zero, the Logical Block Application Tag Mask field and the Expected Logical Block Application Tag field are ignored.

8.64 WRITE BUFFER (3B)

Table 287 WRITE BUFFER (3B)

Byte	Bit							
	7	6	5	4	3	2	1	0
0	Command Code = 3Bh							
1	Mode Specific			Mode				
2	Buffer ID							
3-5	Buffer Offset							
6-8	Parameter List Length							
9	VU = 0		Reserved = 0				FLAG	LINK

The WRITE BUFFER command is used in conjunction with the READ BUFFER command as a diagnostic function for testing the memory of the drive and the SCSI bus integrity. This command does not alter the medium of the drive. Additional modes are provided for downloading microcode and saving microcode.

This command will cause the entire cache to be emptied.

The function of this command and the meaning of fields within the command descriptor block depend on the contents of the mode field.

Table 288 Mode

Mode	Description
00000	Write combined header and data
00010	Data
00100	Download Microcode
00101	Download Microcode and save - single binary file
00111	Download Microcode with offsets, save, and activate - multiple binary files
01010	Write Data to Echo Buffer
01101	Download microcode with offsets, select activation events, save, and defer activate
01110	Download microcode with offsets, save, and defer activate
01111	Activate deferred microcode
11010	Enable expander Communications Protocol
All Others	Not Supported

If any values other than shown above are specified, **Check Condition** status is returned with a sense key of *Illegal Request* and additional sense code of *Invalid Field in CDB*.

8.64.1 Combined Header And Data (Mode 00000b)

In this mode, the data to be transferred is preceded by a four-byte header.

Buffer ID must be zero. If another value is specified, no download function is performed and the command is terminated with **Check Condition** status. And the drive shall set the sense key to *Illegal Request* and additional sense code to *Illegal Field in CDB*.

Buffer Offset must be zero. If another value is specified, no download function is performed and the command is terminated with **Check Condition** status. And the drive shall set the sense key to *Illegal Request* and additional sense code to *Illegal Field in CDB*.

Parameter List Length specifies the number of bytes that shall be transferred during the DATA OUT phase. This number includes four bytes of header, so the data length to be stored in the drive buffer is transfer length minus four. If the length exceeds the buffer size, the command is terminated with **Check Condition** status. And the drive shall set sense key to *Illegal Request* and additional sense code to *Illegal Field in CDB*. A Parameter List Length of less than four (size of header) indicates no data is transferred.

The 4-byte header consists of all reserved bytes.

Table 289 Write Buffer Header

Byte	Bit							
	7	6	5	4	3	2	1	0
0-3	Reserved = 0							

8.64.2 Write Data (Mode 00010b)

In this mode, the DATA OUT phase contains buffer data.

Buffer ID must be zero. If another value is specified, no download function is performed and the command is terminated with Check Condition status. And the drive shall set the sense key to *Illegal Request* and additional sense code to *Illegal Field In CDB.*

Buffer Offset specifies the offset of the memory space specified by the Buffer ID. The initiator should conform to the offset boundary requirements returned in the READ BUFFER descriptor. If the value exceeds the buffer specified, the command is terminated with **Check Condition** status. And the drive shall set the sense key to *Illegal Request* and additional sense code to *Illegal Field In CDB.*

Parameter List Length specifies the Parameter List Length. It must be

- less than the capacity of the buffer size after adding the Buffer Offset value and
- on a sector boundary

A Parameter List Length of zero indicates no data is to be transferred and command status is returned.

If an invalid value is specified, the command is terminated with **Check Condition** status. And the drive shall set the sense key to *Illegal Request* and additional sense code to *Illegal Field In CDB.*

Mode Specific field is reserved

8.64.3 Download Microcode (Mode 00100b)

NOTE: It is not expected that a customer will ever issue this format of the command.

In this mode, the microcode is transferred to the control memory space of the drive. When downloaded, the drive will operate with the newly downloaded code immediately until the next power cycle.

Buffer ID field is used to indicate which portion of the microcode image is being downloaded. The following Buffer IDs are supported by the Target:

- 00h: Main Microprocessor Code
- nnh: ID of Vendor Unique Reserved Area

Any unsupported value for the Buffer ID will cause the command to terminate with **Check Condition** status. And the drive shall set the sense key to *Illegal Request* and additional sense code to *Illegal Field In CDB*.

Buffer Offset must be zero. If an invalid value is specified, the command is terminated with **Check Condition** status. The drive shall set the sense key to *Illegal Request* and additional sense code to *Illegal Field in CDB*.

Parameter List Length must be the size of the data set to be downloaded. It may also be set to 0000h in which case no code is updated and command status is returned. If an invalid value is specified, the command is terminated with **Check Condition** status. And the drive shall set the sense key to *Illegal Request* and additional sense code to *Illegal Field In CDB.*

This process generates a unit attention condition for MICROCODE HAS BEEN CHANGED for all Initiators except the one which sent the WRITE BUFFER command. Upon the completion of the WRITE BUFFER command the new microcode is immediately ready for operation.

Mode Specific field is reserved

Note: The Download Microcode mode described in this specification is to indicate that the drive will accept a command with this mode, though it is not expected that a user will ever issue such a command. To use the write buffer command with this mode, a special microcode version is required from development. If such a microcode is released from development, then it will include appropriate instructions on the function of new microcode and its effect on the drive operations after download.

8.64.4 Download Microcode and save (Mode 00101b) -Single Binary File

In this mode the data is transferred to the drive to save into the System reserved area on the disk. This is for functional upgrade and configuration change reflecting the user's requirements and the manufacturer's reason or both, and it is stored in the media as a permanent copy. The newly downloaded code becomes effective after the drive issues and completes a self-initiated Power On Reset.

Note: It requires up to 30 seconds to update the microcode including the Flash ROM update.

Note: New code to be downloaded to the drive will be provided by development either by request of a customer for an additional function or as a result of a functional change by development. However please note that not all possible fixes or new functions can be applied to a drive in this manner and that there is a very high dependency on the level of ROM code contained within the drive. If an invalid code or a code not compatible with the ROM code is downloaded, the drive will usually reject this code and will continue normal operation. However there is a small possibility that an invalid code will be accepted. If this occurs, the unit usually becomes inoperable and will have to be returned to the manufacturer for recovery.

Buffer ID field is used to indicate which portion of the microcode image is being downloaded. To download microcode, the buffer ID should be set to 00h. Other values are reserved for WDC development purposes only.

Mode Specific field is reserved

8.64.5 Download Microcode with offsets, save, and activate (Mode 00111b) - Multiple Binary Files

In this mode the target receives a segment of the binary microcode file. The Parameter List Length (segment length) of each segment shall be a multiple of 4K bytes. The total length of all segments received shall be equal to the total length of the binary microcode file. All segments must be sent in the proper sequential order.

If an invalid Parameter List Length is specified, **Check Condition** status is returned with sense key of Illegal Request and additional sense code of *Invalid Field in CDB*.

The first segment sent in this mode indicates, by default, the first segment of the binary microcode file. If a **Check Condition** status is returned in this mode, a **Buffer ID** == 00h in the subsequent Write Buffer command in this mode indicates the first segment of the binary microcode file. Otherwise the **Buffer ID** field is ignored.

The **Buffer Offset** field is ignored.

After all segments of the binary microcode file have been received, the drive behavior is the same as Download Microcode and Save (Mode 00101b) - Single Binary File.

8.64.6 Write Data to Echo Buffer (Mode 01010b)

In this mode the Target transfers data into the echo buffer. The echo buffer is assigned in the same manner by the Target as it would for a WRITE operation. Data will be sent aligned on 4-byte boundaries.
Upon successful completion of a WRITE BUFFER command the data will be preserved in the echo buffer unless there is an intervening command to any logical unit, in which case it may be changed.

Mode Specific field is reserved

8.64.7 Download microcode with offsets, select activation, save, and defer activate mode (Mode 01101b)

In this mode, microcode shall be transferred to the device server using one or more WRITE BUFFER commands, saved to nonvolatile storage, and considered deferred. The deferred microcode shall be activated and no longer considered deferred if a WRITE BUFFER command with the activate deferred microcode mode (0Fh) is processed.

The Mode Specific field specify the specifies additional events that shall be used to activate the deferred microcode

Table 262 Select Report field

Bit	7	6	5	...
	PO_ACT	HR_ACT	VSE_ACT	

If the power on activate (**PO_ACT**) bit is set to one, then deferred microcode shall be activated and no longer considered deferred if a power on occurs. If the PO_ACT bit is set to zero, then deferred microcode shall not be activated if a power on occurs.

If the hard reset activate (**HR_ACT**) bit is set to one, then deferred microcode shall be activated and no longer considered deferred if a hard reset occurs. If the **HR_ACT** bit is set to zero, then deferred microcode shall not be activated if a hard reset occurs.

If the vendor specific event activate (**VSE_ACT**) bit is set to one, then deferred microcode shall be activated and no longer considered deferred if a vendor specific event occurs. If the VSE_ACT bit is set to zero, then deferred microcode shall not be activated if a vendor specific event occurs.

8.64.8 Download microcode with offsets, save, and defer activate (Mode 01110b)

In this mode, microcode shall be transferred to the drive using one or more WRITE BUFFER commands, saved to nonvolatile storage, and considered deferred.
The deferred microcode shall be activated and no longer considered deferred when one of the following occurs:

a) a power on;
b) a hard reset;
c) a START STOP UNIT command is processed;
d) a FORMAT UNIT command is processed;
e) a WRITE BUFFER command with the activate deferred microcode mode (0Fh) is processed.

After receiving a FORMAT UNIT command or a START STOP UNIT command, the drive shall, prior to processing the command, activate any deferred microcode that has been downloaded as a result of a WRITE BUFFER command with the MODE field set to 0Eh.

If the current operating state is OM_POWERSAVE (Table 78), the drive shall spin up the drive first to activate the deferred microcode. The drive shall not being placed back into the same OM_POWERSAVE state after the activation via a hard reset or a FORMAT UNIT command is completed. For activation via a START STOP UNIT command, the drive shall be placed into the corresponding power condition specified by **Power Conditions and Power Condition Modifier** fields on the START STOP UNIT command (see Table 268) If the START STOP UNIT command does not leads into power condition changes, the drive shall left as Active state.

This process generates a unit attention condition for MICROCODE HAS BEEN CHANGED for all Initiators in case of activation via a hard reset, a START STOP UNIT command or FORMAT UNIT command.

8.64.9 Activate deferred microcode mode (Mode 01111b)

In this mode, deferred microcode that has been saved using the download microcode with offsets, save, and defer activate mode, if any, shall be activated and no longer considered deferred.
The BUFFER ID field, the BUFFER OFFSET field, and PARAMETER LIST LENGTH field shall be ignored in this mode.

8.64.10 Enable Expander Communications Protocol (Mode 11010b)

In this mode the drive behavior is the same as Write Data to Echo Buffer (Mode 0101b).

8.65 WRITE LONG (10) - (3F)

Table 290 WRITE LONG (10) - (3F)

Byte	Bit							
	7	6	5	4	3	2	1	0
0	Command Code = 3Fh							
1	COR_DIS	WR_UNCOR	PBLOCK=0	Reserved = 0				Obsolete
2-5	(MSB) Logical Block Address (LSB)							
6	Reserved = 0							
7-8	(MSB) Byte Transfer Length (LSB)							
9	VU = 0		Reserved = 0				FLAG	LINK

The WRITE LONG command requests the drive to write **one block** of data transferred from the Initiator.
The transfer data must include

- User Data
- 18 bytes of MEDC data

All WRITE LONG commands will behave as if the WR_UNCOR bit was set with the exception of having the COR_DIS bit set. COR_DIS bit behavior will take precedence if both WR_UNCOR and COR_DIS bits are set.

Parameters are

- **COR_DIS** - correction disabled, bit 7 in byte 1. When this bit is set to one, the drive will mark the LBA as a pseudo unrecovered error with correction disabled. A subsequent read to this LBA would:
  a) Perform no error recovery on the block; perform no automatic reallocation of the affected logical blocks, including any automatic reallocation enabled by the Read-Write Error Recovery mode page;
  b) Not consider errors on the affected logical blocks to be informational exception conditions as defined in the Information Exceptions Control mode page (see SPC-4);
  c) Not log errors on the affected logical blocks in the Error Counter log pages
  d) On a read to the LBA, return check condition status with the sense key set to Medium Error.
- **WR_UNCOR** - write uncorrectable, bit 6 in byte 1. If the COR_DIS bit is not set, the drive will behave in the following manner regardless of the state of this bit. The drive will create a pseudo unrecovered error with correction enabled. On following read commands to the LBA, the drive will:

  Behave like pseudo unrecovered error with correction disabled with the exception that the device waits a predefined period of time before posting uncorrectable error. Time value is equivalent to the amount of time for full step recovery.
- **Logical Block Address** field specifies the logical block at which the write operation shall occur.
- If there is more than one logical block per physical block (i.e., the LOGICAL BLOCKS PER PHYSICAL BLOCK EXPONENT field in the READ CAPACITY (16) parameter data (see 8.24.1) is set to a non-zero value), then:
  a) the device server shall support the physical block (PBLOCK) bit;
  b) a PBLOCK bit set to one specifies that the device shall write the entire physical block containing the specified logical block using the value in the BYTE TRANSFER LENGTH field; and
  c) a PBLOCK bit set to zero specifies that the device shall Write only the specified logical block using the value in the BYTE TRANSFER LENGTH field.
- **Logical Block Address** field specifies the logical block at which the write operation shall occur.

- **Byte Transfer Length**. This field must specify the exact number of bytes of data available for transfer. If a non-zero byte transfer length does not match the available data length, the Target terminates the command with **Check Condition** status, then the sense key is set to *Illegal Request*, and an additional sense code is set to *Invalid Field in CDB*. The valid and ILI bits are set to one and the information field is set to the difference of the requested length minus the actual length in bytes. Negative values are indicated by two's complement notation.

Note:

1) Pseudo unrecovered error with correction enabled handling (COR_DIS=0, WR_UNCOR=1)
   Pseudo unrecovered error with correction enabled is processed like correction is disabled and:
   a) performs no error recovery on the affected logical blocks
   b) not log errors on the affected logical blocks in any log page that contain error counters
   Physical sector is not modified but LBA is flagged as an uncorrectable sector.

8.66 WRITE LONG (16) - (9F/11)

Table 291 WRITE LONG (16) - (9F/11)

Byte	Bit							
	7	6	5	4	3	2	1	0
0	Command Code = 9Fh							
1	COR_DIS	WR_UNCOR	PBLOCK=0	Service Action (11h)				
2-9	(MSB) Logical Block Address (LSB)							
10-11	Reserved = 0							
12-13	(MSB) Byte Transfer Length (LSB)							
14	Reserved = 0							
15	VU = 0		Reserved = 0				FLAG	LINK

Refer to Write Long (10) – (3F) for field definitions.

8.67 WRITE SAME (10) - (41)

Table 292 WRITE SAME (10) - (41)

Byte	Bit							
	7	6	5	4	3	2	1	0
0	Command Code = 41h							
1	WRPROTECT			Reserved = 0		Obsolete		
2-5	(MSB) Logical Block Address (LSB)							
6	Reserved = 0							
7-8	(MSB) Number of Blocks (LSB)							
9	VU = 0		Reserved = 0				FLAG	LINK

The WRITE SAME command instructs the Target to write a single block of data transferred to the Target from the Initiator to a number of sequential logical blocks. This command is useful for writing large data areas without sending all of the data over the SCSI bus.

- See the WRITE (10) command description for the definition of the WRPROTECT field.
- **Logical Block Address** specifies the address at which the write begins. The Number of Blocks specifies the number of contiguous blocks to be written. If the number is zero, all of the remaining blocks on the specified Logical Unit are written.
- **Number of Blocks** specifies the number of contiguous blocks to be written. If the number is zero, all of the remaining blocks on the specified logical unit are written.

The data for this command is not retained in the cache.

8.68 WRITE SAME (16) - (93)

Table 293 WRITE SAME (16) - (93)

Byte	Bit							
	7	6	5	4	3	2	1	0
0	Command Code = 93h							
1	WRPROTECT			Reserved = 0		Obsolete		
2-9	(MSB) Logical Block Address (LSB)							
10-13	(MSB) Number of Blocks (LSB)							
14	Reserved = 0							
15	VU = 0		Reserved = 0				FLAG	LINK

The Write Same command instructs the Target to write a single block of data transferred to the Target from the Initiator to a number of sequential logical blocks. This command is useful for writing large data areas without sending all of the data over the SCSI bus. See the WRITE(10) command description for the definition of the WRPROTECT field.

8.69 WRITE SAME (32) - (7F/0D)

Table 294 WRITE SAME (32) - (7F/0D)

Byte	Bit							
	7	6	5	4	3	2	1	0
0	Command Code = 7Fh							
1	VU = 0		Reserved = 0				FLAG	LINK
2-5	Reserved = 0							
6	Reserved = 0			Group Number = 0				
7	Additional CDB Length = 18h							
8-9	Service Action = 000Dh							
10	WRPROTECT			Reserved = 0		Obsolete		
11	Reserved = 0							
12-19	(MSB) Logical Block Address (LSB)							
20-23	(MSB) Expected Initial Logical Block Reference Tag (LSB)							
24-25	(MSB) Expected Logical Block Application Tag (LSB)							
26-27	(MSB) Logical Block Application Tag Mask (LSB)							
28-31	(MSB) Number of Blocks (LSB)							

The WRITE SAME command requests that the drive write a single block of data transferred from the initiator to disk for a number of sequential logical blocks. This command is useful for writing large data areas with the same data, without sending all of the data over the interface. Each logical block transferred includes user data and may include protection information, based on the WRPROTECT field and the drive format. Each logical block written includes user data and, if the drive is formatted with protection information enabled, protection information.

If the drive is formatted with type 2 protection (PROT_EN=1 and P_TYPE=001b in the READ CAPACITY (16) parameter data), then this command will be processed normally. Any other protection types will result in Check Condition status to be returned with sense key of Illegal Request and additional sense code of Invalid Command Operation Code.

The Expected Initial Logical Block Reference Tag field contains the value of the Logical Block Reference Tag field expected in the protection information of the first logical block accessed by the command.

If the ATO bit is set to one in Mode Page 0Ah, the Logical Block Application Tag Mask field contains a value that is a bit mask for enabling the checking of the Logical Block Application Tag field in the protection information for each logical block accessed by the command. A Logical Block Application Tag Mask bit set to one enables the checking of the corresponding bit of the Expected Logical Block Application Tag field with the corresponding bit of the Logical Block Application Tag field in the protection information.

If the ATO bit is set to zero, the Logical Block Application Tag Mask field and the Expected Logical Block Application Tag field are ignored.

9 SCSI Status Byte

Upon the completion of a command a status byte is sent to the initiator. Additional sense information may also be available depending on the contents of the status byte. The following section describes the possible values for the status byte and sense data. All Reserved fields are set to zero.

Table 295 Format of the SCSI STATUS byte.

Bit							
7	**6**	**5**	**4**	**3**	**2**	**1**	**0**
Reserved = 0		Status Code					RSVD

Table 296 SCSI Status Byte

STATUS BYTE	Description
00h	GOOD The command has been successfully completed.
02h	CHECK CONDITION An error, exception, or abnormal condition has been detected. The sense data is set by the drive. The REQUEST SENSE command should be issued to determine the nature of the condition.
04h	CONDITION MET Not supported.
08h	BUSY This condition is returned when disconnect privilege is not granted while the drive is BUSY processing the other command for the other initiator. The normal initiator recovery action is to issue the command at a later time or to reissue the command and grant the disconnect privilege.
10h	INTERMEDIATE Not supported.
14h	INTERMEDIATE CONDITION MET Not supported.
18h	RESERVATION CONFLICT This status is returned whenever an SCSI device attempts to access the drive, but it has been reserved by another initiator.
28h	QUEUE FULL This status indicates that the target's command queue is full. If a tagged command queuing feature is enabled and there is no room on the command queue, this status is returned when the initiator sends a command. For this status, sense data are not valid.

10 Additional information

This chapter provides additional information or descriptions of various functions, features, or operating models supported by the Target that are not fully described in previous chapters.

10.1 SCSI Protocol

There are various operating conditions that prevent the Target from executing a SCSI command. This section describes each of these operating conditions and their relative priority.

10.1.1 Priority of SCSI Status Byte Reporting

After establishing the I_T_L nexus or I_T_L_Q nexus the Target must first determine whether command execution is allowed. Execution is deferred until a later time if the command must be added to the command queue. Execution may also be prevented by an internal Target condition that requires the reporting of a Check Condition, Queue Full, Busy, or Reservation Conflict Status. There are several different internal conditions to be active at the same time. The order in which the Target checks for each of these conditions determines their priority (highest priority first) as follows:

1. Check Condition status for invalid Logical Unit Number. (See Section 10.1.2 "Invalid LUN Processing")
2. Check Condition status for Incorrect Initiator Connection (See Section 10.1.3 "Overlapped Commands")
3. Check Condition status for Unit Attention Condition (See Section 10.1.5 "Unit Attention Condition")
4. Busy Status or Queue Full Status (See 10.1.4 "Command Processing During Execution of Active I/O Process")
5. Check Condition status for Deferred Error Condition (See Section 10.1.8 “Deferred Error Condition”)
6. Check Condition status during Startup and Format operations (See Section 10.1.6 “Command Processing During Startup and Format Operations”)
7. Reservation Conflict status (See Section 10.1.10 “Command Processing while Reserved")
8. Check Condition status for invalid command op code
9. Check Condition status for invalid command descriptor block

The highest priority internal condition that prevents command execution is reported by the Target provided there is no bus error.

For all Check Conditions Sense data is built by the target provided a valid LUN address is known. Sense data is cleared by the Target upon receipt of any subsequent command to the LUN from the initiator receiving the Check Condition.

10.1.2 Invalid LUN Processing

Any value other than zero is invalid.

The target's response to an invalid LUN varies with the command, as follows:

Inquiry: Execute the command, return the INQUIRY data that indicates unknown device type (byte 0 = 7Fh), and return GOOD status. All other bytes are valid (see 8.6 "INQUIRY (12)").

Request Sense: Execute the command, return the sense data with the Sense Key set to Illegal Request and the Additional Sense Code and Additional Sense Code Qualifier set to LOGICAL UNIT NOT SUPPORTED, and return GOOD status (see also 8.38 "REQUEST SENSE (03)").

All Others: Do not execute the command and return CHECK CONDITION status, along with the auto-sense data with the Sense Key set to Illegal Request and the Additional Sense Code and Additional Sense Code Qualifier set to LOGICAL UNIT NOT SUPPORTED.

In all cases, the target's response to the command for an invalid LUN does not affect the current execution of a command on the valid LUN for this initiator or any other initiator.

10.1.3 Overlapped Commands

The drive does not perform any overlapped command checking.

10.1.4 Command Processing During Execution of Active I/O Process

When the target is not executing any I/O processes, a new I/O process is permitted to execute (unless execution is prevented by another internal target condition listed in 10.1 “SCSI Protocol”).

If an active I/O process exists when the target receives a new command, then the target determines if:

- the command is permitted to execute
- the command is added to the queue
- Queue Full status is to be returned
- Busy status is to be returned

If an active I/O process exists when the target receives a new command, then the target determines how the new command should be handled based on the following rules:

- Check Condition status is returned with sense key set to Logical Unit Not Ready if:
- the startup operation or a format operation is active. See Command Processing During Execution of Active I/O Process for the exact conditions which cause this response.

Note: If a Unit Attention is pending when this condition exists, the sense key is set to Unit Attention rather than Logical Unit Not Ready since Unit Attention has a higher reporting priority (see 10.1.4 "Command Processing During Execution of Active I/O Process")

- The command is permitted to execute if:

the command is a priority command (see Concurrent I/O Process the conditions to execute concurrently are met (see 10.1.1 "Priority of SCSI Status Byte Reporting")

The command is added to the queue if:

- any I/O process already exists at the target, and
- this is not an incorrect initiator connection.
- Queue Full status is returned if:

the command would otherwise be added to the queue (according to the rules described above), but all slots in the queue are full, or the command would otherwise be added to the queue (according to the rules described above), but all of the available queue slots not reserved for use by another initiator are full, or a Format Unit command was previously queued but has not yet begun execution, or the target is in a Degraded Mode (see "Degraded Mode") and a Start Unit command was previously queued but has not yet begun execution.

- Busy status is never returned on SCSI or FCAL. BUSY status is returned on SAS if more than 64 unique Initiators send frames to the drive since the last POR. In that case, BUSY status in only returned for Initiators above and beyond the first 64.

10.1.5 Unit Attention Condition

The target generates a unit attention condition when one of the following occurs:

- The target has been reset

  This includes a power-on reset or a reset caused by a LUN Reset Task Management function or Hard Reset sequence. In all of these cases, a unit attention condition is generated for each initiator.

- MODE SELECT command has been executed

  In this case, a unit attention condition is generated for all initiators except the one that issued the MODE SELECT command. The Additional Sense Code and Additional Sense Code Qualifier reported is MODE PARAMETERS CHANGED. The unit attention condition is generated if any of the current page parameters are set by the MODE SELECT command. The target does not check to see that the old parameters are different from the new parameters. For example: If the initiator issues a MODE SENSE command with a page code to report the current values followed by a MODE SELECT command with the same parameter list, a unit attention condition is generated despite the fact that the current parameters were not changed from their previous value. However, if the target detects an illegal parameter or error condition prior to modifying the current parameters, a unit attention condition is not generated since the parameters were not set. The unit attention condition is also not generated if the MODE SELECT command parameter list does not include any pages and only the header or header/block descriptor is present.

- FORMAT UNIT command has been executed

  In this case, a unit attention condition is generated for all initiators except the one that issued the FORMAT UNIT command. The Additional Sense Code and Additional Sense Code Qualifier reported is NOT READY TO READY TRANSITION, (MEDIUM MAY HAVE CHANGED). This indicates that the block descriptor parameters from the last MODE SELECT command have been used and are now considered current values.

- WRITE BUFFER command to download microcode has been executed

  In this case, a unit attention condition is generated for all initiators except the one that issued the WRITE BUFFER command. The Additional Sense Code and Additional Sense Code Qualifier reported is MICROCODE HAS BEEN CHANGED.

- Commands Cleared by another initiator

  This unit attention condition is generated after an initiator sends a Clear Task Set Task Management function. The unit attention condition is generated for all other initiators with I/O processes that were either active or queued for the logical unit. The Additional Sense Code and Additional Sense Code Qualifier reported is COMMANDS CLEARED BY ANOTHER INITIATOR.

- LOG SELECT command with PCR bit has cleared parameters.

  In this case, a unit attention condition is generated for all initiators except the one that issued the LOG SELECT command. The additional sense code and additional sense code qualifier reported is Log Select Parameters Changed.

- The registration or reservation made by a Persistent Reserve Out command was cleared by another initiator.

  In this case, a unit attention condition is generated for the initiator that held the cleared registration or reservation.

- A Predictive Failure Analysis threshold has been reached and the Method of Reporting field of mode page 1Ch is 2h.

The unit attention condition persists for each initiator until that initiator clears the condition from the logical unit as described below. Several commands are handled as special cases during a unit attention condition these cases are also discussed below.

If the target receives a command from an initiator before reporting a CHECK CONDITION status for a pending unit attention condition for that initiator, the target's response varies with the command as follows:

Table 297 Response

Inquiry	Execute the command, return GOOD status, and preserve the unit attention condition.
Report Luns	Same as above
Request Sense	Execute the command, return any pending sense data, return GOOD status, and preserve the unit attention condition. If there is not any pending sense data, the sense data associated with the highest priority unit attention condition is returned and the highest priority unit attention condition is cleared for this initiator.
All Others	Do not execute the command, return a CHECK CONDITION status, clear the highest priority unit attention condition for this initiator and return the associated sense data. More than one unit attention condition may be generated for an initiator before that initiator clears the unit attention condition.

10.1.6 Command Processing During Startup and Format Operations

If the Target receives a command from an Initiator while the Target is executing a startup or format operation, the response of the Target varies with the command as follows:

Table 298 Response

INQUIRY	The drive sends inquiry data and returns appropriate status.
REQUEST SENSE	Executes the command, returns a Sense key of NOT READY and an Additional Sense Code of LOGICAL UNIT NOT READY and returns GOOD STATUS. The Additional Sense Code Qualifier that is returned depends on type of I/O processes that are active: For the START/UNIT STOP and the Auto-start operation, the qualifier returned is LOGICAL UNIT IS IN PROCESS OF BECOMING READY. For the FORMAT UNIT command, the qualifier returned is LOGICAL UNIT NOT READY, FORMAT IN PROGRESS, and the Sense key specific bytes are set to return the progress indication.
REPORT LUNS	The drive sends REPORT LUNS data and appropriate status.
ALL OTHER	The drive terminates the command with CHECK CONDITION status. The Sense data generated is described in Request Sense above.

10.1.7 Internal Error Condition

The Target generates an Internal Error condition for all Initiators when an internally initiated operation ends with an unrecoverable error, that is, the startup sequence for Auto Start enabled terminates after the SCSI bus has been enabled and prior to completion of the bring-up sequence.

An Internal Error condition causes Sense data to be generated and saved for all Initiators. The Error Code field of the Sense is set for a Current Error (70h or 72h) and the Sense Key is set to HARDWARE ERROR. Recovered errors are not reported.

The Internal Error condition persists for each Initiator until that Initiator clears the condition from the logical unit as described below. Several commands are handled as special cases during an Internal Error condition. These cases are also discussed.

If the Target receives a command from an Initiator while an Internal Error condition exists for that Initiator, the response of the Target varies with the command as follows:

Table 299 Response

INQUIRY	The drive executes the command with GOOD status and does not clear the Internal Error condition.
REQUEST SENSE	The drive executes the command, returns the sense data generated by the Internal Error condition, returns Good Status, and clears the Internal Error condition for that Initiator.
ALL OTHER	The drive terminates the command with a CHECK CONDITION status and clears the Internal Error condition.

10.1.8 Deferred Error Condition

Error code (71h or 73h) of sense data indicates that the Check Condition status returned is the result of an error or exception condition that occurred during execution of a previous command for which Good status has already been returned.
The drive creates an Deferred Error condition when

- Execution of a Format Unit command with the immediate bit of one ends with an error.
- Execution of a Write command with WCE (Write Cache Enable) bit of one ends with an error.

10.1.9 Degraded Mode

There are certain errors or conditions which may impair the ability of the drive to function normally. Rather than fail hard the drive is designed to be as responsive as possible. Also, in most cases, some action on the part of the initiator may be used to restore normal operation. This mode of limited operation is called Degraded Mode.

There are 3 conditions in the Degraded Mode:

- Spindle Motor Degrade which is caused by one of the following conditions:
  - Spindle Motor was started (by POR or Unit Start command) and the Target is under Self Configuration.
  - Spindle Motor Failed to start.
  - Spindle Motor was stopped by Unit Stop command after the Target successfully completed the Self Configuration.
- Self Configuration Failure Degraded which is caused by one of the following conditions:
  - RAM Code, Configuration Sector Read Failure
  - RAM Code, Configuration Sector Revision Mismatch
- Format Command Failure Degraded. This condition is caused when Format Unit command failed or was interrupted abnormally (Mode Page 0, byte 5, bit 4 FDD controls Format Degraded mode)

10.1.9.1 Response to SCSI Command in Degraded Mode - Disable Auto Start

The tables on the following pages show the degraded mode status with acceptable commands and additional sense codes

Table 300 Spindle Motor Degraded Mode - Disable Auto Start

Command (w/Option)	Response
Request Sense	Executed. The Target may return Sense Key 02h (Not Ready) ASC/ASCQ 0402h (Initialize Command Required)
Inquiry (EVPD=0)	Executed
Inquiry (EVPD=1)	Executed and Check Condition is returned with Sense Key 05h (Illegal Request) ASC/ASCQ 2400h (Invalid Field in CDB)
Test Unit Ready	Executed and Check Condition is returned with Sense Key 02h (Not Ready) ASC/ASCQ 0402h (Initialize Command Required)
Start Stop Unit (Start)	Executed - Success: Good Status is returned. Motor Degraded Mode is cleared - Spindle Motor Start Failure: Check Condition with Sense Key 02h (Not Ready) ASC/ASCQ 0400h (Start Spindle Motor Fail) - Self Configuration Failure: Check Condition with Sense Key 02h (Not Ready) ASC/ASCQ 4080h (Diag Fail- Bring up Fail) Sense Key 02h (Not Ready) ASC/ASCQ 4085h (Diag Fail-RAM Code NOT load)
Start Stop Unit (Stop)	Executed. Good Status is returned. Motor Degraded Mode is NOT cleared
Other Commands	Not Executed. Check Condition Status is returned with Sense Key 02h (Not Ready) ASC/ASCQ 0402h (Initialize Command Required)

10.1.9.2 Response to SCSI Command in Degraded Mode - Auto Start Delay/ Spinning Up

Table 301 Spindle Motor Degraded Mode - Auto Start Delay/Spinning Up

Command (w/Option)	Response
Request Sense	Executed. The Target may return Sense Key 02h (Not Ready) ASC/ASCQ 0401h (In Process of Becoming Ready)
Inquiry (EVPD=0)	Executed
Inquiry (EVPD=1)	Executed and Check Condition is returned with Sense Key 05h (Illegal Request) ASC/ASCQ 2400h (Invalid Field in CDB)
Test Unit Ready	Executed and Check Condition is returned with Sense Key 02h (Not Ready) ASC/ASCQ 0401h (In Process of Becoming Ready)
Start Stop Unit (Start)	Executed - Success: Good Status is returned. Motor Degraded Mode is cleared - Spindle Motor Start Failure: Check Condition with Sense Key 02h (Not Ready) ASC/ASCQ 0400h (Start Spindle Motor Fail) - Self Configuration Failure: Check Condition with Sense Key 02h (Not Ready) ASC/ASCQ 4080h (Diag Fail- Bring up Fail) Sense Key 02h (Not Ready) ASC/ASCQ 4085h (Diag Fail-RAM Code NOT load)
Other Commands	Not Executed. Check Condition Status is returned with Sense Key 02h (Not Ready) ASC/ASCQ 0401h (In Process of Becoming Ready)

10.1.9.3 Response to SCSI Command in Degraded Mode - Spindle Start Failure

Table 302 Spindle Motor Degraded Mode - Spindle Start Failure

Command (w/Option)	Response
Request Sense	Executed. The Target may return Sense Key 02h (Not Ready) ASC/ASCQ 0400h (Start Spindle Motor Fail)
Inquiry (EVPD=0)	Executed
Inquiry (EVPD=1)	Executed and Check Condition is returned with Sense Key 05h (Illegal Request) ASC/ASCQ 2400h (Invalid Field in CDB)
Test Unit Ready	Executed and Check Condition is returned with Sense Key 02h (Not Ready) ASC/ASCQ 0400h (Start Spindle Motor Fail)
Start Stop Unit (Start)	Executed - Success: Good Status is returned. Motor Degraded Mode is cleared - Spindle Motor Start Failure: Check Condition with Sense Key 02h (Not Ready) ASC/ASCQ 0400h (Start Spindle Motor Fail) - Self Configuration Failure: Check Condition with Sense Key 02h (Not Ready) ASC/ASCQ 4080h (Diag Fail- Bring up Fail) Sense Key 02h (Not Ready) ASC/ASCQ 4085h (Diag Fail-RAM Code NOT load)
Start Stop Unit (Stop)	Executed. Good Status is returned. Motor Degraded Mode is NOT cleared
Other Commands	Not Executed. Check Condition Status is returned with Sense Key 02h (Not Ready) ASC/ASCQ 0400h (Start Spindle Motor Fail)

10.1.9.4 Response to SCSI Command in Degraded Mode - Spindle Stopped by Unit Stop Command

Table 303 Spindle Motor Degraded Mode - Spindle Stopped by Command

Command (w/Option)	Response
Request Sense	Executed. The Target may return Sense Key 02h (Not Ready) ASC/ASCQ 0402h (Initialize Command Required)
Inquiry (EVPD=0)	Executed
Inquiry (EVPD=1)	Executed
Test Unit Ready	Executed and Check Condition is returned with Sense Key 02h (Not Ready) ASC/ASCQ 0402h (Initialize Command Required)
Start Stop Unit (Start)	Executed - Success: Good Status is returned. Motor Degraded Mode is cleared - Spindle Motor Start Failure: Check Condition with Sense Key 02h (Not Ready) ASC/ASCQ 0400h (Start Spindle Motor Fail) - Self Configuration Failure: Check Condition with Sense Key 02h (Not Ready) ASC/ASCQ 4080h (Diag Fail- Bring up Fail) Sense Key 02h (Not Ready) ASC/ASCQ 4085h (Diag Fail-RAM code NOT load)
Start Stop Unit (Stop)	Executed. Good Status is returned. Motor Degraded Mode is NOT cleared
Other Commands	Not Executed. Check Condition Status is returned with Sense Key 02h (Not Ready) ASC/ASCQ 0402h (Initialize Command Required)

10.1.9.5 Self Configuration Failure Degraded Mode

Table 304 Self Configuration Failure Degraded Mode

Command (w/Option)	Response
Request Sense	Executed. The Target may return Sense Key 02h (Not Ready) ASC/ASCQ 4080h (Diag Fail- Bring up Fail) Sense Key 02h (Not Ready) ASC/ASCQ 4085h (Diag Fail-RAM code NOT load)
Inquiry (EVPD=0)	Executed
Inquiry (EVPD=1)	Executed and Check Condition is returned with Sense Key 05h (Illegal Request) ASC/ASCQ 2400h (Invalid Field in CDB)
Test Unit Ready	Executed and Check Condition is returned with Sense Key 02h (Not Ready) ASC/ASCQ 4080h (Diag Fail- Bring up Fail) Sense Key 02h (Not Ready) ASC/ASCQ 4085h (Diag Fail-RAM code NOT load)
Start Stop Unit (Start)	Executed - Success: Good Status is returned. Motor Degraded Mode is cleared - Spindle Motor Start Failure: Check Condition with Sense Key 02h (Not Ready) ASC/ASCQ 0400h (Start Spindle Motor Fail) - Self Configuration Failure: Check Condition with Sense Key 02h (Not Ready) ASC/ASCQ 4080h (Diag Fail- Bring up Fail) Sense Key 02h (Not Ready) ASC/ASCQ 4085h (Diag Fail-RAM code NOT load)
Write Buffer (Download and Save)	Executed. - Success: Good Status is returned. Motor Degraded Mode is cleared - Self Configuration Failure: Check Condition with Sense Key 02h (Not Ready) ASC/ASCQ 4080h (Diag Fail- Bring up Fail) Sense Key 02h (Not Ready) ASC/ASCQ 4085h (Diag Fail-RAM code NOT load)
Other Commands	Not Executed. Check Condition Status is returned with Sense Key 02h (Not Ready) ASC/ASCQ 4080h (Diag Fail- Bring up Fail) Sense Key 02h (Not Ready) ASC/ASCQ 4085h (Diag Fail-RAM code NOT load)

10.1.9.6 Format Command Failure Degraded Mode

Table 305 Format Command Failure Degraded Mode

Command (w/Option)	Response
Request Sense	Executed. The Target may return Sense Key 02h (Not Ready) ASC/ASCQ 3100h (Format Corrupted) Sense Key 03h (Medium Error) ASC/ASCQ 3100h (Format Corrupted)
Inquiry (EVPD=0)	Executed
Inquiry (EVPD=1)	Executed
Test Unit Ready	Executed and Check Condition is returned with Sense Key 02h (Not Ready) ASC/ASCQ 3100h (Format Corrupted)
Format Unit	Executed - Success: Good Status is returned. Format Degraded Mode is cleared - Failure: Check Condition Status is returned and Format Degraded Mode is NOT cleared.
Other Commands (read and write)	Not Executed. Check Condition Status is returned with Sense Key 03h (Medium Error) ASC/ASCQ 3100h (Format Corrupted) Non-read/write commands will execute so the drive is as responsive as possible and for restoring normal operation.

Note: Mode Page 0 byte 5 bit 4 (FDD) = 0

*Note: See also Section 10.1.9 "*Degraded Mode*" and Section 8.4* FORMAT UNIT (04)*".*

10.1.10 Command Processing while Reserved

A logical unit is reserved after successful execution of the Reserve command. Each time a Reserve command is executed successfully, the Target records the SCSI ID of the Initiator that made the reservation and the SCSI ID of the Initiator that is to receive the reservation. This information is needed to determine whether subsequent commands should be permitted or if the Reservation Conflict Status should be reported. The Initiator that made the reservation is the Initiator that issued the Reserve command. The Initiator to receive the reservation may be either the same or a different Initiator (third-party reservation).

If the logical unit is reserved when a new command is received, the Target examines the command opcode and the SCSI ID of the issuing Initiator to determine whether a Reservation Conflict Status should be returned based on the following rules:

If the issuing Initiator is the one that made the reservation and also the one to receive the reservation, then all commands are permitted.

If the issuing Initiator is neither the one that made the reservation nor the one to receive the reservation, then

- A Request Sense or Inquiry command is permitted.
- A Release command is permitted but is ignored.
- Any other command results in a Reservation Conflict Status.

If the issuing Initiator is the one that made the reservation but is not the one to receive the reservation, then

- An Inquiry, Request Sense, Reserve, or Release command is permitted.
- Any other command results in a Reservation Conflict Status.

If the issuing Initiator is not the one that made the reservation but is the one to receive the reservation, then

- A Reserve command results in a Reservation Conflict Status.
- A Release command is permitted but is ignored.
- Any other command is permitted.

If a Reservation Conflict Status is not reported and the command is permitted, then the Target checks the next highest priority internal condition to determine whether execution is allowed. See Section 10.1.1 "Priority of SCSI Status Byte Reporting".

Command Persistent Reserve Out can perform reservation as well. See Section 8.14 PERSISTENT RESERVE OUT.

10.2 Priority Commands

Certain SCSI commands always execute without returning a Busy Status or Reservation Conflict Status in response to the command. These commands are

- Inquiry
- Request Sense
- Report LUNs
- Test Unit Ready

These commands are executed prior to attempting to complete the execution of any other pending command in the queue. These commands are never queued.

10.3 Command Queuing

When the initiator specifies that the drive shall disable command queuing, the initiator must send only untagged commands. When the initiator specifies that the target shall enable command queuing, the initiator may send either tagged or untagged command, but shall not use both at the same time.
The following commands are never queued.

- Priority Commands (i.e.: Request Sense and Inquiry)
- Commands for an invalid LUN.

10.3.1 Queue Depth

Any initiator can queue at least one command at any time irrespective of the actions of any other initiators in the system. A single initiator may queue up to 128 commands, if no other initiator has more than one command in the queue, although at times this maximum may be reduced as the drive can reserve command blocks for internal use.

10.3.2 Queue Full Status

The drive will respond with QUEUE FULL status to a SCSI command when all queue slots are utilized. The SCSI command is not placed in the command queue under this condition.

10.3.3 Termination of I/O Processes

Normal termination of I/O processes occurs when the target returns SCSI status. I/O processes may also be terminated by the following:

- An ABORT TASK terminates the specified I/O process from the issuing initiator
- An ABORT TASK SET terminates all I/O processes from the issuing initiator
- A CLEAR TASK SET, TARGET RESET or reset terminates all I/O processes from all initiators

10.4 Command Reordering

Command reordering is supported when enabled by the Queue Algorithm Modifier in mode page 0A (see 8.11.9 Mode Page 0A (Control Mode Page Parameters)").

10.5 Concurrent I/O Process

Concurrent command are always allowed to execute concurrently with non-priority commands. A second priority command received while a priority command is being executed is put at the head of the command queue.

- WRITE commands when another WRITE command is an active I/O process
- READ commands when another READ command is an active I/O process

When a concurrent command ends in CHECK CONDITION status, the QErr bit on the Mode Page 0Ah will determine how other active I/O processes from the same initiator for that drive will be handled.

10.6 Write Cache

If the WCE (Write cache enable) bit is 1, the drive returns Good Status and closes the connection immediately after receiving the data of the last sector before actually writing the data onto the media.

If the drive detects an error after it returns a Good Status, the drive sets a Deferred Error (Error Code of sense data = 71h) and a following command will be returned with Check Condition and the Contingent allegiance condition is established. Under the Contingent allegiance condition all queued processes including commands from other initiators are suspended.

10.7 Automatic Rewrite/Reallocate

The target supports Auto Reallocate for READ, WRITE, WRITE VERIFY, and VERIFY.
Automatic Reallocate operates from within the read/write command. When an automatic reallocation occurs, the read or write command takes longer to complete.
This operation is sometimes referred to as auto-reassignment due to its similarity to the operation performed by the reassign command.
Following is a description of the target behavior for each setting of ARRE. ARRE setting affects all data errors. (No Sector Found, Data Sync Byte Errors and Data LDPC Errors.)

ARRE=1: An error site determined to need rewriting or reallocation during a read is automatically reallocated as a pending defect prior to the sending of the status. It will not be identified by a read defect data command. It will be rewritten or reallocated on the next write prior to the sending of the status. If it is reallocated it will be identified in a read defect data command.

ARRE=0: Behaves the same as ARRE=1.

The target will automatically rewrite/reallocate for the following commands.

Read

Verify

Verify portion of Write and Verify

For all other commands the ARRE setting is ignored and the target will not automatically rewrite/ reallocate
Following is a description of the target behavior for each setting of AWRE. AWRE setting affects only No Sector Found Errors on writes.

AWRE=1: An error site determined to need reassignment during a write is automatically reallocated at the conclusion of the write and prior to sending the status. The site will be automatically reallocated only if the write recovery succeeded at the conclusion of the write.

AWRE=0: Behaves the same as AWRE=1

The target will automatically reallocate for the following commands.

Write

Write Same

Write portion of Write and Verify

For all other commands the AWRE setting is ignored and the target will not automatically reallocate.
Auto Reallocate information is communicated via the sense data returned following a command during which a site was determined to need rewriting or reassignment. The LBA returned in the sense data is the LBA that was determined to need rewriting or reassignment.
The sense data combinations with auto/recommend rewrite/reallocate are listed below.

Table 306 Sense data combinations with auto/recommend rewrite/reallocate

Key	Code	Qual	Description
1	17	01	Recovered Data with retries
1	17	06	Recovered Data without LDPC - Auto Reallocated
1	17	09	Recovered Data without LDPC - Data Rewritten
1	18	00	Recovered Data with LDPC
1	18	02	Recovered Data with LDPC - Auto Reallocated
1	18	07	Recovered Data with LDPC - Data Rewritten

10.8 Segmented Catching

10.8.1 Overview

Segmented Caching divides the data buffer into several smaller buffers. Each buffer is used as Read/ Write/Read-Ahead buffer.

10.8.2 Read Ahead

The Read Ahead function consists of reading data that the Initiator has not yet requested to the drive buffer. This function is intended to improve performance for an initiator that frequently accesses sequential data with successive SCSI read commands. The Read Ahead function works when RCD (the read cache disable) bit of read cache page (page 08h) is set to zero.
The drive initiates the Read ahead function when the following conditions exist:

- RCD is 0
- Read, Verify and Write and Verify is received.
- The consecutive LBA of the requested LBA is not available in the buffer

If SCSI reset or target reset message is received, all contents of segmented buffer is flushed.
Even if an error occurs during the Read ahead, the error will not be reported to the Initiator. The data read before the error occurred will be stored as valid data by the Read Ahead function.

10.9 Multiple Initiator Systems

This section describes how the target behaves in a multiple initiator system. Up to 64 initiators may be supported at any one time.

10.9.1 Sense Data

A separate sense data area is reserved for each initiator. Each area is maintained independently. This allows a command from one initiator to complete with a CHECK CONDITION status and generate sense data without being affected by a subsequent command from a different initiator. There is no requirement for the first initiator to send a REQUEST SENSE command to retrieve the Sense Data prior to the execution of a command from a different initiator.

10.9.2 Mode Pages

A single set of Mode pages is maintained, where this indicated by the Control Mode Page (0xA) TST field = 0. This includes both current and saved parameters. If a MODE SELECT command is executed that updates the current parameters, a unit attention condition is generated for all initiators except the one that issued the command. See 10.1.5 “Unit Attention Condition” for more information.

10.10 Multiple Initiator Environment

10.10.1 Initiator Sense Data

Separate sense data is reserved for each I-T-L. Each sense data is maintained independent of commands from other initiators.

10.10.2 Initiator Mode Select/Mode Sense Parameters

A single shared copy of the Mode Select/Mode Sense parameters is maintained by the drive. This includes both the current and saved parameters.

10.11 Reset

Reset actions will return the drive to a known, initialized state.
This device supports the Hard reset option as defined in the SCSI standards and the reset sources discussed below.

10.11.1 Initiator Sense Data

There are four sources of resets detected by the target:

Table 307 Reset

Reset Name	Reset Source
Power-On Reset	This is the signal generated by the hardware at initial power-on
Self-Initiated reset	This is a software-generated reset that occurs when a catastrophic error is detected by the microcode.
Hard Reset	This is the Hard Reset performed during a Link Reset Sequence.
LUN Reset	This is a LUN RESET TMF (08h) sent in a TASK IU.

10.11.2 Reset Actions

The action taken by the drive following a reset is dependent on the source of the reset.

10.11.2.1 Power-On reset and Self-Initiated reset

These two reset conditions cause the following to be performed in the order shown:

- A power-up sequence
- A startup sequence is necessary to put the drive in a ready state

These reset conditions cause the following actions:

- If the reset occurs during the power-up sequence, the power-up sequence is re-started.
- If the auto-start option is enabled and a start-up sequence has not yet completed, the start-up sequence is restarted. Note: The power-up sequence is not re-run, since it has already completed.
- If the reset occurs while a physical sector is being written, the WRITE operation is disabled at the end of the current sector. The media is not corrupted if power is maintained to the end of the current sector.

10.12 Diagnostics

The drive will execute Power on Diagnostics at power on time to assure the correct operation of the drive by validating components (ROM, RAM, Sector Buffer, EEPROM, HDC, Spindle Motor, Actuator), checking stored information in the Reserved Area and EEPROM, and verifying fault detects circuits.
Self-test can be invoked by issuing a SEND DIAGNOSTIC command.

10.12.1 Power on Diagnostics

At power on time the following tests are executed:

1. Validation of ROM and EEPROM
2. RAM test for internal RAM
3. Test and Initialize HDC registers
4. RAM test for Sector Buffer
5. Start Spindle Motor (if enabled)
6. Calibration of Actuator
7. Read/Write test for all Heads
8. Validation of RAM code and data table (RDM, Log, Mode Page) from the Reserved Area

If Auto spin up is disabled, steps 5 - 8 will be executed by the first START STOP UNIT command which has the Start bit set.

Faults detected before successful completion of the HDC section could prevent the drive from responding to a selection.

Faults detected after the successful completion of the HDC test section will be reported as CHECK CONDITION status to the Initiator on the first command issued after a fault is detected (except for the INQUIRY, REPORT LUNS and REQUEST SENSE commands). The INQUIRY, REPORT LUNS and REQUEST SENSE commands will always be responded with a GOOD status. Detecting a fault during power on will not terminate execution of the tests nor will it terminate the power on process.

10.12.2 Self-test via SEND DIAGNOSTIC Command

10.12.2.1 Default Self-test

The default self-test is invoked by the SlfTst bit in the SEND DIAGNOSTIC command. The response is simply a GOOD status if the test is successful or a CHECK CONDITION status if the test fails.
The following tests are performed by the default self-test (in the order defined):

1. **Spin check** is to check if the spindle motor is running at the correct speed.
2. **Write, Read and Compare test** is a disk read/write test. It writes data to a predefined location in the reserved area and then reads it back and validates the content. All heads are tested.
3. **Seek test** is a servo test. It validates seeks to 256 random locations out of the full volume.

10.12.2.2 Short and Extended Self-tests

There are two other types of self-tests that may be invoked using the Function Code field in the SEND DIAGNOSTIC command: a short self-test and an extended self-test. The tests performed in the short and extended self-tests are described later. The time required by a logical unit to complete its extended self- test is specified in the Extended self-test Completion Time field in the Control Mode Page. A value of FFFFh indicates that the extended self-test takes 65 535 seconds or longer. See also the EXTENDED SELF-TEST COMPLETION MINUTES field in the Extended INQUIRY Data VPD page. The results of self-test can be retrieved via the LOG SENSE command for Log Page 10.

10.12.2.3 Self-test Modes

There are two modes for short and extended self-tests: a foreground mode and a background mode. These modes are described in the following clauses.

Foreground mode

When the drive receives a SEND DIAGNOSTIC command specifying a self-test to be performed in the foreground mode, the drive will return status for that command after the self-test has been completed. While performing a self-test in the foreground mode, the drive will respond to all commands except INQUIRY, REPORT LUNS, and REQUEST SENSE with a CHECK CONDITION status, a sense key of NOT READY and an additional sense code of LOGICAL UNIT NOT READY - SELF-TEST IN PROGRESS.

If the drive is performing a self-test in the foreground mode and a test error occurs, the drive will update the self-test results log page and report CHECK CONDITION status with a sense key of HARDWARE ERROR and an additional sense code of LOGICAL UNIT FAILED SELF-TEST. The application client may obtain additional information about the failure by reading the self-test results log page.

An application client may terminate a self-test that is being performed in the foreground mode using an ABORT TASK, ABORT TASK SET, or CLEAR TASK SET task management function. If the drive receives an ABORT TASK, ABORT TASK SET, or CLEAR TASK SET task management function while performing a self-test in the foreground mode, it will abort the self-test and update the self-test results log page.

Background mode

When the drive receives a SEND DIAGNOSTIC command specifying a self-test to be performed in the background mode, the drive will return status for that command as soon as the command descriptor block has been validated. After returning status for the SEND DIAGNOSTIC command specifying a self- test to be performed in the background mode, the drive will initialize the self-test results log page as follows. The Function Code from the SEND DIAGNOSTIC command will be placed in the Function Code field in the log page. The self-test Results field shall be set to 0Fh. After the self-test results log page is initialized, the drive will begin the first self-test segment.

While the drive is performing a self-test in the background mode, it shall terminate with a CHECK CONDITION status any SEND DIAGNOSTIC command it receives that meets one of the following criteria:

a. The SlfTst bit is one
b. The Function Code field contains a value other than 000b or 100b.

When terminating the SEND DIAGNOSTIC command, the sense key shall be set to NOT READY and the additional sense code shall be set to LOGICAL UNIT NOT READY, SELF-TEST in PROGRESS. While performing a self-test in the background mode, the drive will suspend the self- test to service any other command other than SEND DIAGNOSTIC (with Function Code field set to 100b) WRITE BUFFER (with the mode set to any download microcode option), FORMAT UNIT and START UNIT STOP command. Suspension of the self-test to service the command will occur within 2 seconds. If SEND DIAGNOSTIC (with Function Code field set to 100b), WRITE BUFFER (with the mode set to any download microcode option), FORMAT UNIT or START UNIT STOP command is received, the drive will abort the self-test, update the self-test log, and service the command within two seconds after the command descriptor block has been validated.

An application client may terminate a self-test that is being performed in the background mode by issuing a SEND DIAGNOSTIC command with the Function Code field set to 100b (Abort background self-test function).

Elements common to foreground and background self-test modes

The Progress Indication field returned in response to a REQUEST SENSE command may be used by the application client at any time during execution of a self-test to poll the progress of the test. While executing a self-test unless an error has occurred, the drive will respond to a REQUEST SENSE command by returning a sense key of NOT READY and an additional sense code of LOGICAL UNIT NOT READY - SELF-TEST IN PROGRESS with the sense key specific bytes set for progress indication.

The application client may obtain information about the twenty most recently completed self-tests by reading the self-test results log page. This is the only method for an application client to obtain information about self-tests performed in the background mode. The default self-test results are not logged in the log page.

Tests performed in the Short and Extended Self-test

The following table defines the tests performed in the short and extended self test. They are defined by their segment number which is also used to report Self-Test Results, in Log Sense Page 10. Note that the only difference between the Short and the Extended tests, is the sequential verify test in segment 7h. Also note that either of these tests can be run in foreground or background mode as previously described.

Table 308 Short and Extended Self-Test Description

Segment Number	Short Self-Test	Extended Self-Test	Test Description
1h	**Drive Ready Test**		Internal check to insure drive is “ready”, similar to a Test Unit Ready command.
2h	**Drive Diagnostics**		This test is comprised of the Default Self Test as defined in Section 10.12.2.1 “Default Self-test”.
3h	**SMART**		Perform SMART testing and check results to ensure that SMART threshold criteria are not exceeded.
4h	**Low Level Format check**		Check to insure that the media is currently not in the MEDIA FORMAT CORRUPTED state.
5h	**Physical Head Check**		Write/Read test on each head in a predefined location in the drive's Reserved Area of the disk.
6h	**Random Verify**		Perform 4000 random verify operations and insure no uncorrectable errors.
7h	**- Verify First 300MB** **- Verify Last 100 MB**	**Verify all LBA’s**	Sequential verify operation. Ensure that no uncorrectable errors occur within the verify range.
8h	**Recheck SMART**		Same as segment 4h.

10.12.2.4 Background Medium Scan

For a related function, see Mode Page 1C (Informational Exceptions Control).

10.13 Idle Time Function

The drive periodically saves data in logs and S.M.A.R.T. counters in the reserved area of the disks. The information is used by the drive to support various SCSI commands and for the purpose of failure analysis.

10.14 Command Time out Limits

The 'Command Time-out Limits' are defined as the time period from the SCSI Arbitration phase through the SCSI Task complete message, associated with a particular command.
The following times are for environments where Automatic Reallocation is disabled and there are no queued commands.

10.14.1 Reassignment Time

The drive should be allowed a minimum of 5 seconds to complete a “Reassign Blocks” command.

10.14.2 Format Time

Approximately 19 hours should be allowed for complete a "Format Unit" command when certification is disabled. Allow 39 hours when certification is enabled. If "Fast Format" is enabled via the FFMT bit in mode page 00h, allow 7 minute for completion.

10.14.3 Start/Stop Unit Time

The drive should be allowed a minimum of 30 seconds to complete a “Start Stop Unit” command (with Immed bit = 0). Initiators should also use this time to allow startup sequences initiated by auto start ups and “Start Stop Unit” commands (with Immed bit = 1) to complete and place the drive in a “ready for use” state.

Note: A time-out of one minute or more is recommended but NOT required. The larger system time-out limit allows the system to take advantage of the extensive ERP/DRP that the drive may attempt in order to successfully complete the startup sequence.

Note: For SAS devices a NOTIFY(Enable Spinup) primitive is required prior to actually starting to spin up the spindle motor (regardless of whether a Start Stop Command with the Start bit set, was received or not).

10.14.4 Medium Access Command Time

The time-out limit for medium access commands that transfer user data or non-user data or both should be a minimum of 30 seconds. These commands are

Pre-Fetch
Read
Read Defect Data
Seek
Send Diagnostic (Function Code = 0)
Read Long
Write
Write and Verify
Write Buffer
Write Same
Verify

Note: The 30-second limit assumes the absence of bus contention and data transfers of 64 blocks or less. This time should be adjusted for anticipated bus contention and if longer user data transfers are requested.

10.14.5 Time-out Limits for Other Commands

The drive should be allowed a minimum of 30 seconds to complete these commands:

Inquiry
Log Select
Log Sense
Mode Select
Mode Sense
Persistent Reserve In/Out
Read Buffer
Read Capacity
Read Long
Reassign Blocks (Note 1)
Release
Request Sense
Reserve
Security Protocol In/Out (Note 1)
Set/Report Device Identifier
Start/Stop Unit (Note 1)
Synchronize Cache
Test Unit Ready
Write Buffer (Note 1)
Write Long (Note 1)

The command time-out for a command that is not located at the head of the command queue should be increased by the sum of command time-outs for all of the commands that are performed before it is.

***Note 1**: Extended command execution time of up to 90s can occur after power cycle or F/W download due to additional time required for media cache destaging.*

10.15 Recommended Initiator ERP

The Drive's design points for error reporting to the system assumes certain system action for the error return codes. These assumptions are:

1. SCSI protocol will be the first priority in reporting errors.
2. The system will maintain a log of all reported errors.
3. System architecture should include all error handling recommendations made in this section. Deviations should have mutual agreement between Drive development and system integration.

This section is directed toward documenting the assumptions made by the Drive that the system is expected to implement. The two error classes that the system should be concerned with are DATA and NON-DATA errors.

Data errors are those errors that deal with the handling of data to and from the MEDIA and are identified by the Additional Sense Code contained in the sense data. The Additional Sense Codes for data errors are as follows:

- OC - Write error
- 11 - Unrecovered read error
- 14 - No record found
- 16 - Data Synchronization mark error
- 17 - Recovered read error without LDPC correction
- 18 - Recovered read error with LDPC correction

Typically, data errors do not include positioning of the heads or the data path though the electronics.
Non data errors are those errors that do not have a direct relationship with transferring data to and from the media. Non data errors can include data handling if the media is not associated with the error (that is, interface error).
The system action assumed for each class of error is outlined here.

10.15.1 Drive Service Strategy

The Drive service strategy is defined so the customer will be able to use the system as soon after a failure is detected as possible. The first priority is to replace the entire drive to make the system operational with minimal service time. The service representative should:

1. Back up all the customer data on this drive if possible
2. Replace the complete drive
3. Restore the customer data
4. Return the drive to customer service

10.15.2 Recommendations for System Error Log

The system error log should contain information about the Drive error that will allow recovery actions. The system error logs should contain all the error information returned in the sense data. At a minimum, the following information about each error occurrence should be logged.

- Valid bit and error code (Sense byte 0)
- Sense Key (Sense byte 2)
- Information bytes (Sense bytes 3 through 6)
- Command specific information (Sense bytes 8 through 11)
- Additional Sense Code (Sense byte 12)
- Additional Sense Code Qualifier (Sense byte 13)
- Field Replaceable Unit (Sense byte 14)
- Sense Key Specific (Sense bytes 15, 16, and 17)
- Vender Unique error information (Sense bytes 20 through 23)

10.15.3 Data Recovery Procedure

Statistically, most data error activity is noise related and has nothing to do with defects in the media. It is wrong for the system to assume that every data error reported occurred because of a defect in the media. It is also wrong for the system to assume that every data error that occurred because of a media defect rendered the Drive unusable.

Recurring data error activity at the same physical location is an indication of a problem. The problem can be due to a media defect or magnetic damage. A media defect is physical damage to the recording capability of the media while magnetic damage is a defect in the bit pattern written to the media.

In both cases, the error can be corrected without replacing the unit. The physical sector may require relocation. The Drive determines the need to reassign a sector. The Mode Select Page 1 option bit ARRE (See Section 8.11.3 “Mode Page 01 (Read/Write Error Recovery Parameters)”) set active allows the Drive to relocate recovered read data errors. Non recovered data errors or the ARRE bit being inactive will have additional sense codes returned to recommend reassignment of sectors.

The need to reassign a sector should be infrequent. Sites not meeting error rate criteria are removed from use during SAT (Surface Analysis Test) in Drive manufacturing. With the exception of some early life SAT escapes (sites that were marginally missed during SAT), reassigning defective sectors should be rare. Frequent sector reassignment may be an (early) indication of another type of failure. Sector reassignments are monitored as part of the predictive failure analysis. When a threshold is exceeded, the Drive will notify the initiator that a scheduled service action is required.

Drive soft error rates are based on extraneous random faults that are not predictable. Media defects discovered after the Drive completes manufacturing final test need to be relocated so that soft error rates are not influenced by predictable known error sites. Failure of the system to properly relocate defective media sites can have a direct influence on system throughput and drive error rates.

10.15.3.1 Reassign a Physical Sector

The Drive determines the need to reassign physical sectors based on error activity. Once a physical sector requires reassignment, the Drive will reassign the physical sector.

10.15.3.2 Data Error Logging

The Drive will report data errors to the initiator that do not require immediate action (successful auto reallocation, successful auto rewrite, or no action needed on this occurrence). The initiator should log these errors in the system error log. No other action is required.

Table 309 Log Only Errors

Key	Code	Qual	Description
1	16	00	Data Synchronization Mark Error
1	17	01	Recovered Data with Retries
1	17	06	Recovered Data without LDPC - Auto Reallocated
1	17	09	Recovered Data without LDPC - Data Rewritten
1	18	00	Recovered Data with LDPC
1	18	02	Recovered Data with LDPC - Auto Reallocated
1	18	07	Recovered Data with LDPC - Data Rewritten

10.15.3.3 Reassign Blocks Recovery

The Drive provides the capability to remove media defects without reducing capacity.

Recovery from a failed reassignment consists of the following actions:

- Updating the defect descriptor to remove the LBA's that have been successfully reassigned and then retry the Reassign Blocks command. The LBA contained in the Command Specific Information field of the Sense Data is the LBA in the first defect descriptor that was not reassigned because of the failure. If the command failed because of an unrecoverable read error other than those specified in the defect descriptor, add this LBA to the defect descriptor and retry the command. Refer to Section 8.29 “REASSIGN BLOCKS (07)”, for additional information.
- If the retried Reassign Blocks (07) command completes successfully, returning to normal processing.
- If the retried Reassign Blocks (07) command fails, servicing the drive using the service guidelines recommended in Section 10.15.1 "Drive Service Strategy".

10.15.4 Non data Error Recovery Procedure

The Drive will follow a logical recovery procedure for non data errors. The initiator options for non-data errors are limited to logging the error, retrying the failing command, or replacing the drive.
These recovery procedures assume the initiator practices data back-up and logs errors at the system level for interrogation by service personnel.

10.15.4.1 Drive Busy

The Drive is busy performing an operation. **This is not an error condition.** The initiator can test for completion of the operation by issuing *Test Unit Ready (00)* (or media access) commands.

- If the *Test Unit Ready (00)* (or media access) command completes with *Check Condition Status* then issue a *Request Sense (03)*
  - If the specified recovery procedure for the sense data is for a condition other than drive busy, follow the recovery procedure for the condition reported.
  - If the specified recovery procedure for the sense data is for a drive busy condition, then continue re-issuing the *Test Unit Ready (00)* and *Request Sense* commands for the duration of a media access time-out or until the drive returns *Good Status*.
  - If the drive has been busy for longer than the limit specified in Section 10.14 “Command Time out Limits”, then service the drive using the service guidelines recommended in Section 10.15.1 "Drive Service Strategy" Otherwise return to normal processing.
- If the *Test Unit Ready (00)* (or media access) command completes with *Good Status*, then return to normal processing.

10.15.4.2 Unrecovered Drive Error

The initiator should retry the failing command.

1. If the retry of the failing command completes with *Good Status* or recovered Sense Key, follow the recovery procedure in Section 10.15.4.3 “Recovered Drive Error”.
2. If the retry of the failing command completes with hardware error sense, verify there is no outside cause (e.g., power supply) for the failure, then retry the failing command.
   a. If the retry of the failing command completes with *Good Status*, follow the recovery procedure in next Section 10.15.4.3 “Recovered Drive Error”.
   b. If the retry of the failing command completes with Recovered sense or Hardware error sense, then service the drive using the service guideline recommended in Section 10.15.1 "Drive Service Strategy".

10.15.4.3 Recovered Drive Error

The Initiator should log the error as soft with the recovery level.

10.15.4.4 Drive Not Ready

The initiator should do the following:

1. Issue a *Start Stop Unit (1B)* command.
2. Verify that the drive comes ready within the time specified.
3. If the drive fails to come ready within the specified time, service the drive using the service guidelines specified in Section 10.15.1 "Drive Service Strategy".
4. Retry the failing command.
   a. If the failing command completes with *Good Status*, log the error as recovered.
   b. If the failing command completes with Not Ready sense, verify there is no outside cause (for example, the power supply). Then service the drive using the service guidelines specified in Section 10.15.1 "Drive Service Strategy".

10.15.4.5 No Defect Spare

Three conditions can cause this error:

1. When the *Reassign Blocks (07)* command is issued and there are no spares available for the Drive to use for the relocation requested.
2. When the Glist is full and the sector to be reassigned cannot be added.
3. During a format operation, there was not enough space available to fulfill the spare requirement (Dlist is too large).

Service the Drive following Section 10.15.1 "Drive Service Strategy".

10.15.4.6 Degraded Mode

Refer to Section 10.1.9 “Degraded Mode”, for the definition of this state. There are three causes for entering degraded mode. In all cases the Sense Key is *Not Ready*. The causes are the following:

1. Sense Code/Qualifier of *Logical Unit Not Ready*, *initializing command required*. The spindle motor not spinning or not at the proper speed. This may not be an error condition. The initiator should issue a *Unit start (1B)* command to start the spindle motor. If the Drive fails to come ready in the time specified in Section 10.14 “Command Time out Limits” service the drive using the service guideline recommended in Section 10.15.1 "Drive Service Strategy".
2. Sense Code/Qualifier of *Diagnostic Failur*e. Failure of a Send Diagnostic self test, a start up sequence, or other internal target failures.

- Failure of a send diagnostic self test or a start up sequence.

  This failure is the result of the diagnostics that are executed during power on or when the *Send Diagnostic (1D)* command is executed detecting a failure. As with the RAM code not loaded and the configuration data not loaded, the recovery is either a power cycle or issuing the *Send Diagnostic (1D)* command with the self test bit set active.

  Recovery for a failed Send Diagnostic (1D) is achieved in one of the following ways:

  Executing the Send Diagnostic (1D) command

  Power cycling the drive

  If the failure repeats, service the drive using the service guideline recommended in Section 10.15.1 "Drive Service Strategy".

  Recovery for a failed power up sequence is achieved in one of the following ways:

  Issuing a Unit start (1B) command

  Power cycling the drive.

  If the failure repeats, service the drive using the service guideline recommended in Section 10.15.1 "Drive Service Strategy".

- Internal target failures

  The drive periodically adjusts the track following for each head to compensate for expansion and contraction of the disks due to temperature changes. If one of these adjustments fails, the drive will enter a degraded mode

to prevent writing data off track.

Recovery of this condition is either a power cycle or successful completion of the Send Diagnostic (1D). Service the drive using the recommended service guidelines specified in Section 10.15.1 "Drive Service Strategy", if the power cycle or the Send Diagnostic (1D) command fail to complete successfully.

3. Sense Code/Qualifier of **Format Command Failed** Format Unit (04), Sense Code/Qualifier of **Medium Format Corrupted Reassign Failed** Reassign Blocks (07) command, or an automatic reallocation failed or was abnormally terminated.

   Recovery from a failed Format Unit (04) is achieved by retrying the command. If the command fails a second time, service the drive following the procedure defined in Section 10.15.1 "Drive Service Strategy".

If the above defined recovery procedures fail to clear the degraded mode condition, the Drive should be replaced. Follow the procedure in Section 10.15.1 "Drive Service Strategy", when replacing the drive.

10.15.4.7 Reserved Area Hard Error

Sectors found defective in the reserved area of the disk cannot be reassigned after the Drive leaves the factory. The data in the reserved area is not directly accessible by the initiator. For this reason, the reserved area has back up copies of all data. A data error must occur in both copies of the data record before the Drive considers a reserved area read error. When this happens, the integrity of the drive is questionable.
Service the Drive using Section 10.15.1 "Drive Service Strategy".

10.15.4.8 Interface Protocol

For all interface protocol errors, the initiator should complete the following steps:

1. Correct the parameter that caused the Illegal Request
2. Retry the failing command
3. If the first retry of the failing command completes with
   - *Good Status*, log the error as recovered
   - *Check Condition Status* with sense data for an Illegal Request, verify there is no outside cause (for example, the power supply) for the failure
   - *Other*, follow the recommendations for the error condition reported. Retry the failing command. If this retry of the failing command completes with
     - *Good Status*, log the error as recovered
     - *Check Condition Status* with sense data for an Illegal Request, service the drive using the service guideline recommended in Section 10.15.1 "Drive Service Strategy".
     - *Other*, follow the recommendations for the error condition reported.

10.15.4.9 Aborted Command

The initiator should determine the cause from the Additional Sense Code (byte 12):

- Sense Key = B (Aborted Command) with Additional Sense Codes of 1B, 25, 43, 49, and 4E are initiator caused abort conditions. The initiator should correct the condition that caused the abort and retry the failing command.
- Sense Key = B (Aborted Command) with Additional Sense Code of 44 or 48 are drive caused abort conditions. The initiator should:
  1. Retry the failing command.
  2. If the retry of the failing command completes with
     - *Good Statu*s, log the error as recovered.
     - Abort Command Sense, verify there is no outside cause (e.g. power supply) for the failure.
  3. Retry the failing command.
  4. If the retry of the failing command completes with
     - *Good Statu*s, log the error as recovered.
     - Abort command sense, then service the drive using the service guideline recommended in Section 10.15.1 "Drive Service Strategy".
- Sense Key = B (Aborted Command) and an Additional Sense Code of 47 can be an initiator or Drive caused abort condition. The initiator should follow the above procedure for initiator caused abort conditions if the Drive

detected the SCSI bus parity error. The initiator should follow the above procedure for Drive caused abort conditions if the initiator detected the SCSI bus parity error.

10.15.4.10 Unit Attention Condition

Unit Attention Conditions are not errors. They alert the initiator that the drive had an action that may have changed an initiator controlled state in the drive. These conditions are the following:

Not Ready to Ready Transition
Not ready to ready transition, unit formatted. This *Unit Attention Condition* will not be reported to the initiator that issued the *Format Unit (04*).

Reset
Reset - This means the drive was reset by either a power-on reset, Hard Reset, LUN Reset TMF or an internal reset.

Mode Parameters Changed
A *Mode Select (15)* command successfully completed. This means that the mode parameters that are the current value may have changed. The parameters may or may not have changed but the command to change the parameters successfully completed. The Drive does not actually compare the old current and the new current parameters to determine if the parameters changed. This *Unit Attention Condition* will not be reported to the initiator that issued the *Mode Select (15).*

Microcode Has Changed
Write Buffer (3B) to download microcode has successfully completed. This means that the microcode that controls the Drive has been changed. The code may or may not be the same as the code currently being executed. The Drive does not compare old level code with new code.

Commands Cleared by Another Initiator
Tagged commands cleared by a clear queue message. This means that the command queue has been cleared. The *Unit Attention Condition* is not reported to the initiator that issued the clear queue message. *Unit Attention Condition* is reported to all initiators that had commands active or queued.
Reissue any outstanding command.

Log Select Parameters Changed
A Log Select (4C) command successfully completed. This means that the Log Select command cleared statistical information successfully (See Section 8.7 “LOG SELECT (4C)”). Unit Attention Condition is reported to all initiators excluding the initiator that issued the Log Select command.

Device Identifier Changed
A Set Device Identifier (A4) command successfully completed. This means that the Set Device Identifier information field has been updated. (See 8.46 “SET DEVICE IDENTIFIER (A4/06)”) A Unit Attention Condition is reported to all initiators excluding the initiator that issued the Set Device Identifier command.

Persistent Reserve Out Changed
The registration or reservation made by a Persistent Reserve Out command was cleared by another initiator. In this case, a unit attention condition is generated for the initiator that held the cleared registration or reservation.

10.15.4.11 Components Mismatch

The compatibility test is performed at a power cycle. The compatibility test verifies the microcode version of the electronics. When the Drive detects the microcode version mismatch, the most likely cause is the result of incorrect parts used during a service action.

If the error reported is Key/code/qualifier 4/40/80, Diagnostic failure, bring-up fail, the initiator should do the following:

1. Retry Power cycle
2. Check the send diagnostic end status. If the status is
   - GOOD, Return to normal processing
   - *Check Condition Statu*s, issue a *Request Sense (03)* and follow the recommendations for the sense data returned unless the sense data is for a component mismatch. If the sense data is for component mismatch, service the drive using the service guideline recommended in Section 10.15.1 "Drive Service Strategy".

10.15.4.12 Self Initiated Reset

The Drive will initiate a self reset when the condition of the Drive cannot be determined. The internal reset will terminate any outstanding commands, release any reserved initiators, and stop the spindle motor. The initiator can recover by

1. Logging the error
2. Retrying the failing command. If the failing command completes with:
   - *Good Status*, return to normal processing
   - Self initiated reset sense, service the drive according the guidelines recommended in Section 10.15.1 "Drive Service Strategy".
   - Other, follow the recommendations for the error reported.

10.15.4.13 Defect List Recovery

This is not an error condition.
The initiator either requested a defect list in a format (block or vendor specific) that the Drive does not support or the requested defect list(s) exceed the maximum list length that can be returned. If the Sense Key/Code/Qualifier are:

1/1F/00, the requested list(s) exceed the maximum length that can be supported. The initiator should request one list at a time. If a single list exceeds the maximum returnable length, this may be an indication of a marginally operational drive. Service the drive following the service guidelines in Section 10.15.1 "Drive Service Strategy".

1/1C/01 or 1/1C/02, the requested defect list is not in the format that the Drive supports. The requested defect list is returned in the physical (cylinder, sector, head) format. This is the default format. There is no initiator action required for this condition.

10.15.4.14 Miscompare Recovery

A Miscompare can occur on a *Verify (2F)* command or a *Write and Verify (2E)* with the byte check (BytChk) bit active. Recovery for a Miscompare error is different for the two commands.

Verify Command
The initiator should do the following:

1. Verify that the data sent to the drive is the correct data for the byte-by-byte compare.
2. Read the data from the media with a *Read (08)* or *Read (28)* command and verify that the data from the media is the expected data for the byte-by-byte compare.
   - If all data are correct, this is an indication that the data may have been read from the media incorrectly without an error detected. Service the drive using the procedure specified in Section 10.15.1 "Drive Service Strategy".
   - If all data are not correct, this is an indication that the data on the media is not the data the initiator expected. Rewrite the correct data to the media.

Write and Verify Command
The drive uses the same data in the data buffer to write then read and compare. A Miscompare error on the *Write and Verify (2E)* command is an indication that the drive cannot reliably write or read the media. Service the drive using the procedures specified in Section 10.15.1 "Drive Service Strategy".

10.15.4.15 Microcode Error

The microcode from the interface is validated before the device operates using that microcode. When the validation detects incorrect or incomplete data, the Drive enters degraded mode.
If the initiator attempted to load microcode using the *Write Buffer (3B)* retry the *Write Buffer (3B).* If the command completes with

- *Good Status* - return to normal processing
- *Check Condition Status* - service the drive using the service guidelines recommended in Section 10.15.1 "Drive Service Strategy".

If the check sum error occurred during normal processing, the initiator may attempt to load microcode before deciding to service the drive using the service guidelines recommended in Section 10.15.1 "Drive Service Strategy".

To load new microcode, the initiator should issue a Write Buffer (3B) command with the download and save option. If the Write Buffer (3B) command completes with

- Good Status, return to normal processing. Retry the failing command. If the task complete with
  - Good Status - Continue normal processing.
  - Check Condition Status for check sum error - Service the drive using the service guidelines recommended in Section 10.15.1 "Drive Service Strategy".
  - Check Condition Status for any other error - follow the recommended recovery procedure for the error reported.
- Check Condition Status for Check sum error, service the drive using the service guidelines recommended in Section 10.15.1 "Drive Service Strategy".
- Check Condition Status for any other error, follow the recommendations for the returned sense data.

10.15.4.16 Predictive Failure Analysis

The Drive performs error log analysis and will alert the initiator of a potential failure. The initiator should determine if this device is the only device with error activity.
If this drive is the only drive attached to the initiator with error activity, service the drive using the procedures specified in Section 10.15.1 "Drive Service Strategy".

Note: Service for this drive can be deferred. The longer service is deferred, the more probable a failure can occur that will require immediate service.

If more than this drive is experiencing error activity, the drive is probably not at fault. Locate and service the outside source causing error activity on this drive.

10.16 RAID Rebuild Assist

A rebuild operation is performed when some or all of the LBAs on a logical unit have become unreadable in a storage array controller and a new logical unit is being initialized to replace the failed logical unit. The data for the new logical unit may be constructed by reading the data from remaining logical units and using that data to reconstruct the data to be written to the replacement logical unit.
The rebuild assist mode allows the storage array controller controlling the rebuild process to determine which logical blocks on the failed logical unit are unreadable without having to read every LBA to determine the unreadable logical blocks (i.e., the read command is terminated with CHECK CONDITION status and the failed LBA is reported in the sense data). The storage array controller then may reconstruct the failed logical blocks. The remaining logical blocks may be copied to the replacement logical unit.

The application client should issue sequential read commands to read the available data from the failed logical unit. If a read command does not encounter an unrecoverable LBA, then the read command should complete without error.

The rebuild assist mode allows reporting of an unrecovered read error or write error that is predicted (i.e., predicted unrecovered error). Predicted unrecovered errors may be determined by the device server when rebuild assist mode in enabled.

The rebuild assist mode also allows reporting of an unrecovered read error or write error that is unpredicted (i.e., unpredicted unrecovered error). Unpredicted unrecovered errors are any unrecovered error that is not predicted when the rebuild assist mode is enabled.

If the device server encounters predicted unrecoverable LBAs on a read command, then:

A) The sense key is set to ABORTED COMMAND
B) The additional sense code is set to MULTIPLE READ ERRORS
C) The INFORMATION field is set to the LBA of the first unrecoverable logical block
D) The COMMAND-SPECIFIC INFORMATION field is set to the LBA of the last unrecovered logical block in a sequence of contiguous unrecovered logical blocks that started with the LBA specified in the INFORMATION field.

10.16.1 Rebuild Assist diagnostic page

The Rebuild Assist diagnostic page provides:

A) A method to put the logical unit in the rebuild assist mode.

B) A method to put the logical unit in a simulated failure mode in conjunction with the rebuild assist mode.

10.16.1.1 Rebuild Assist input diagnostic page

An application client may send a RECEIVE DIAGNOSTIC RESULTS command to retrieve information about a rebuild assist mode that may be enabled.

Table 310 Rebuild Assist input diagnostic page

Bit	Byte							
	7	6	5	4	3	2	1	0
0	PAGE CODE (42h)							
1	Reserved							
2	(MSB)	PAGE LENGTH (4 + 2n)						
3								(LSB)
4	Reserved							ENABLED
5	Reserved							
6	Reserved							
7	PHYSICAL ELEMENT LENGTH (n)							
8	(MSB)	PHYSICAL ELEMENT MASK						
7 + n								(LSB)
8 + n	(MSB)	DISABLED PHYSICAL ELEMENT						
7 + 2n								(LSB)

10.16.1.2 Rebuild Assist output diagnostic page

An application client may send a SEND DIAGNOSTIC command to:

A) Enable rebuild assist mode.

B) Enable rebuild assist mode with disabling of physical elements (i.e., to simulate predicted failure of physical elements)

C) Disable rebuild assist mode.

Table 311 Rebuild Assist output diagnostic page

Bit	Byte							
	7	6	5	4	3	2	1	0
0	PAGE CODE (42h)							
1	Reserved							
2	(MSB)	PAGE LENGTH (4 + 2n)						
3								(LSB)
4	Reserved							ENABLED
5	Reserved							
6	Reserved							
7	PHYSICAL ELEMENT LENGTH (n)							
8	(MSB)	PHYSICAL ELEMENT MASK						
7 + n								(LSB)
8 + n	(MSB)	DISABLED PHYSICAL ELEMENT						
7 + 2n								(LSB)

11 Firmware Security

This chapter provides information on WDC encryption-specific HDD firmware and features. It is assumed that the reader is familiar with the referenced specifications and industry standards.

11.1 Referenced Specifications and Standards

11.1.1 TCG Specifications

This section references 3 separate TCG specifications, which are available on the TCG website: (**http://www.trustedcomputinggroup.org/**):

A) TCG Core Specification, Version 2.00, Revision 1.00 (4/20/2009)
- The TCG Core Specification is the general specification for trusted computing that encompasses all classes of devices, including storage

B) TCG Storage Interface Interactions Specification (SIIF), Version 1.0, 1/27/2009
- Specifies the interaction between the HDD and the SCSI/ATA protocols

C) TCG Storage Security Subsystem Class (SSC): Enterprise, Version 1.00, rev 3.00 (1/10/2011)
- A Security Subsystem Class defines minimum acceptable Core Specification capabilities of a storage device in a specific class (in our case – enterprise).
- Storage devices in specific classes may have a subset of the capabilities that are defined in the core specification

D) TCG Storage Security Subsystem Class: Opal Specification, Version 2.00 Final Revision 1.00 (February 24, 2012)

11.1.2 Federal Information Processing Standards (FIPS)

This section references the following Federal Information Processing Standards, published by the US National Institute of Standards (NIST), which are available on the NIST website (**http://www.itl.nist.gov/fipspubs/**):

1. FIPS 197, Advanced Encryption Standard (AES), 2001 November 26.
   http://csrc.nist.gov/publications/fips/fips197/fips-197.pdf
2. FIPS 180-4, Secure Hash Standard (SHS)
   http://csrc.nist.gov/publications/fips/fips180-4/fips180-4_final.pdf
3. FIPS 140-2, Security Requirements for Cryptographic Modules – 01 May 25
   (Supersedes FIPS PUB 140-1, 1994 January 11)
   http://csrc.nist.gov/publications/fips/fips140-2/fips1402.pdf

11.1.3 National Institute of Standards and Technology (NIST)

This section references the following NIST publications, available on the NIST website (**http://www.nist.gov/index.html**)

- [AES] Advanced Encryption Standard, FIPS PUB 197, NIST, 2001, November
- [DSS] Digital Signature Standard, FIPS PUB 186-4, NIST, 2013, July
- [FIPS140] Security Requirements for Cryptographic Modules, FIPS PUB 140-2, NIST, 2002 December
- [HMAC] The Keyed-Hash Message Authentication Code, FIPS PUB 198-1, 2007 June
- [SHA] Secure Hash Standard (SHS), FIPS PUB 180-4, NIST, 2015 August
- [SP800-38E] Recommendation for Block Cipher Modes of Operation: The XTS-AES Mode for Confidentiality on Storage Devices, SP800-38E, NIST, 2010 January
- [SP800-38F] Recommendation for Block Cipher Modes of Operation: Methods for Key Wrapping, NIST, 2012 December
- [SP800-57] Recommendation for Key Management – Part I General (Revision 4), NIST, 2016 January

- [SP800-90A] Recommendation for Random Number Generation Using Deterministic Random Bit Generators, NIST, 2015 June
- [SP800-90B] Recommendation for the Entropy Sources Used for Random Bit Generation (Second Draft), NIST, January 2016
- [SP800-131A] Transitions: Recommendation for Transitioning the Use of Cryptographic Algorithms and Key Lengths, NIST, 2011 Jan
- [SP800-132] Recommendation for Password-Based Key Derivation, NIST, 2010 December

11.1.4 Department of Defense

DoD 5220.22-M, "National Industrial Security Program Operating Manual", 2/28/2006
http://www.dtic.mil/whs/directives/corres/pdf/522022m.pdf

DoD 5220.22-M Supplement 1, “National Industrial Security Program Operating Manual Supplement”, 02/1995 -
http://www.dtic.mil/whs/directives/corres/pdf/522022MSup1.pdf

11.1.5 RSA Laboratories Standards

1. RSA-PSS - **http://www.rsa.com/rsalabs/node.asp?id=2146**
2. RSA PKCS #5 v2.0 Password-Based Cryptography Standard **–**
   ftp://ftp.rsasecurity.com/pub/pkcs/pkcs-5v2/pkcs5v2-0.doc

11.1.6 Other Standards

T10 SCSI Standard.(T10 homepage **- http://www.t10.org/index.html**)

11.2 Implementation Exceptions

The following is a list that describes non-compliance with the TCG Enterprise SSC specification:

- The SSC specification requires support for 1024 bands, but the implementation supports up to 6 bands.
- Bands must be 4K aligned. This means Band start (Range start) and Band size (Range size) must be 4K aligned.
- The K_AES_256 table was implemented with only the **UID** and **MODE** columns.
- Only one active session is permitted at a time. If a new session is requested when a session is already active, the drive answers the host with SP_BUSY, instead of NO_SESSIONS_AVAILABLE

11.3 Implementation Features and Details Outside of TCG Specifications

The following features are outside of the TCG specifications.

1. Ports
2. Firmware signing

The following implementation details are outside of the TCG SSC specification.

a. The SSC Specification states “The TPer SHALL implement the ParamCheck Longitudinal Redundancy Check (LRC) for Get and Set method calls on a PIN value". If the LRC check is erroneously applied to a value other than a PIN we ignore it, therefore no error is generated.
b. When handling a "TCG cmd followed by a R/W cmd", all reads and writes that follow a TCG command will be processed in the normal way. No special handling or error messages will be sent to the host. It is up to the host to understand the possible outcomes of TCG commands and r/w command ordering and plan accordingly.
c. CRC checking is disabled in all cases, so the drive will return data to the host. If the user successfully authenticates, then unencrypted data is returned to the host. If the user is unable to authenticate, encrypted data is returned to the host.
d. The TPer replies with SP_BUSY for requests beyond 1 session.

11.4 Encryption Algorithms

11.4.1 Advanced Encryption Standard (AES) Support

AES encryption is implemented in hardware, with support for ECB or XTS mode for 128 bit or 256 bit keys. A single key is active at any one time within the AES hardware engine. Firmware is responsible for reading the keys from the hardware and also for determining which key is attached to a given LBA range; the hardware can only detect if the LBA has been encrypted or not. The TCG protocol does not allow for a user to choose or switch between AES algorithms, so it is up to the vendor to choose which AES algorithm is used in their implementation. The WDC TCG SSC implementation in firmware supports AES 256-XTS only.

11.4.2 'Level 0 Discovery' Vendor Specific Data

This section refers to section 10.2.14 of the TCG Storage Security Subsystem Class document (see the Specifications section of this document). This Vendor Specific section is documented below.

Table 312 Persistent Reserve In (5E)

Byte	Bit							
	7	6	5	4	3	2	1	0
16	Version (set to 0)							
17	Vendor Specific State Information							
18	Reserved							
19	RSVD	MB_s	0	0	Diag_s	Dload_s	Locking_s	FDE_s
20	Reserved							
21	RSVD	MB_e	0	0	Diag_s	Dload_e	Locking_e	FDE_e
22	0	0	0	0	0	0	0	inFIPS
23-47	Reserved							

FDE_s/FDE_e - Full disk encryption is Supported (equivalent to Media Encryption in Locking Feature Descriptor Enterprise SSC 10.2.14) / Full disk encryption is Enabled on one or more band.

Locking_s/Locking_e - LBA band locking is supported - locking object exists in the locking SP of the device (equivalent to Locking Enabled in Locking Feature Descriptor Enterprise SSC 10.2.14) / The locking object for a band has either ReadLocked or WriteLocked attribute set (equivalent to Locked in Locking Feature Descriptor Enterprise SSC 10.2.14).

Dload_s/Dload_e - support for Admin SP Firmware download port / Firmware download port via Admin SP is locked.

Diag_s/Diag_e - Support for Admin SP vendor specific Diagnostic port / Diagnostics port via Admin SP is locked.

MB_s/MB_e - Multiple encrypting bands supported / multiple encrypting bands enabled. This bit shall be set to 1 if more than one band exists in addition to the global band and is defined with at least one LBA.

In FIPS – This bit is set when FIPS mode has been configured.

11.4.2.1 T10 End-To-End Data Protection

AES encryption is performed after T10 end-to-end data protection data has been added, so that the T10 information is encrypted along with the customer data.

11.4.3 Deterministic Random Bit Generation (DRBG)

Pseudo-random number generation is implemented with a certified NIST SP800-90A DRBG. The DRBG uses AES as a primitive for both entropy mixing and entropy output. DRBG state is kept private to ensure that the keys that are generated by the device are unpredictable. The entropy source of the DRBG is servo subsystem noise. It has been verified to NIST SP800-90B.

11.4.4 Key Wrap

The NIST SP800-38F key wrap algorithm is used to encrypt a key with another key (KEK= Key Encryption Key). For any band i, the KEK_i is derived from PIN_i and salt_i using the NIST 800-132 algorithm. The KEK_i is then used to wrap a band's encryption key.

11.4.5 Key Erasure

Cryptographic erase procedure

- Erase and overwrite wrapped key material with 0x00.
- Erase and store the new wrapped key material.

11.5 TCG SSC Tables

Two copies of all TCG SSC tables and data structures are stored in the RID; one is used as a primary copy and the other as a backup copy. The backup copy is used in the event the primary copy becomes corrupted. Each time a write is executed to any TCG table, both the primary and backup copies of the tables are updated and saved in the RID. In the case of a corrupted copy, the good copy is always used to restore the corrupted copy to the correct state. If both copies of the tables become corrupted during operation, the tables will be reinitialized to default values automatically, and this will result in a key mismatch error when a read is attempted.

The default values in the TCG tables created at the time of manufacturing are per the TCG SSC specification. The following tables contain VU (Vendor Unique) entries, which are set at the time of manufacturing.

- 'Admin SP' C_PIN table
- 'Locking SP' C_PIN table
- K_AES_256 table
- 'Locking SP' Locking Access Control table
- 'Locking Info' Table
- 'Locking SP' Locking Table

The VU entries for these tables are specified below. In addition, explanation of default values is given for non-VU entries that require it.

11.5.1 'Admin SP' C_PIN and 'Locking SP' C_PIN Tables

Per TCG SSC specification, the PIN is set to the MSID at manufacturing time. WDC has specified the MSID to be the serial number of the drive concatenated 4x. Try Limit is set to 0, meaning that there is no limit. Tries is set 0, meaning that there have been no fail attempts. Persistence is set to 0, meaning the "Tries" value does not persist through power cycles (The "Tries" value is reset to 0 after successful attempt or a power cycle).

Table 313 WDC Default Values for 'Admin SP' C_PIN & 'Locking SP' C_PIN

PIN	Try Limit	Tries	Persistence
SID	0	0	0
MSID	0	0	0
-	-	-	-
PSID	0	0	0

11.5.2 K_AES_256 Table

The K_AES_256 table has 6 rows, one row for each band that can be allocated by the user. The first row is for the "global range", also known as Band 0. This table was implemented without the "Name", "Common Name", and "Key" Columns.

Table 314 WDC Implementation of K_AES_256 Table

UID (8 byte hex)	MODE
00 00 08 06 00 00 00 01	23
00 00 08 06 00 00 00 02	23
…	...
00 00 08 06 00 00 00 06	23

The mode is specified in the TCG Enterprise SSC as a "Vendor Unique" (VU) entry. WDC initializes it in manufacturing to **mode**=23 (media encryption mode, per TCG specification) for all 6 entries.

11.5.3 'Locking SP' Access Control Table

The TCG Enterprise SSC defines the values for Row Number and UID as "Vendor Unique" (VU). WDC has defined them to be the row number in the table, with a range of 0-459. The range is calculated using the following formula:

number_of_rows = (#Supported Bands * 7) +12, where

- #Supported Bands = 6 (The implementation supports 6 bands)
- The number 7 comes from the fact that each band has 7 UID/method combinations
- The number 12 comes from the following 12 methods that must be included in the table.
  1. ThisSP / Authenticate
  2. Authority Table/Next
  3. Anybody Authority Object/ Get
  4. Band Masters Authority Object/ Get
  5. Erase Master Auth. Object / Get
  6. C_PIN table / Next
  7. Erase Master C_PIN Object/ Set
  8. Locking Info Table / Get
  9. Locking Table / Next
  10. DataStore / Get
  11. DataStore / Set
  12. ThisSP / Random

Table 315 WDC Implementation of 'Locking SP' Access Control Table

Row Number	UID
0	0
1	1
...	...
53	53

11.5.4 'Locking Info' Table

As specified in the TCG Enterprise SSC, this table has only 1 row. The "Vendor Unique" entries are specified in the table below. Encryption Support is initialized to **Encryption Support=23** (media encryption mode) in manufacturing.

Table 316 WDC Implementation of 'Locking Info' Table

NAME	Version	Encrypt Support	Max Ranges	Max ReEncryptions	Keys Available Cfg
0	0	23	6	0	0

11.5.5 'Locking SP' Locking Table

The "Vendor Unique" (VU) values for this table are shown below.

Table 317 WDC Implementation of 'Locking SP' Locking Table

Next Key	ReEncrypt State	ReEncrypt Request	Adv Key Mode	Verf Mode	Cont On Reset	Last ReEncrypt LBA	Last Re Enc Stat	General Status
00 00 00 00 00 00 00 00h	0	0	0	0	0	0	0	0
-	-	-	-	-	-	-	-	-
00 00 00 00 00 00 00 05h	0	0	0	0	0	0	0	0

In the **ActiveKey** column, the Enterprise SSC allows for byte 3 to be defined as either 05 or 06. The WDC implementation uses 06.

11.6 Firmware Download and Signing

The WDC Firmware signing and download for encryption drives is meant to provide a mechanism for secure updates through the Host interface. Firmware is downloaded to the drive through the host interface, and the signature is verified using a public key installed in the reserved area during manufacturing, before it is loaded to RAM or installed in the reserved area on the HDD.

Signature verification uses the RSA-PSS (Probabilistic Signature Scheme) signature verification algorithm with EMSA-SHA256 as padding function. The firmware was designed and implemented with the intention of meeting the signing requirements under FIPS 140-2.

All WDC firmware packages will be signed, but only encryption enabled drives will verify the signature. If the signature cannot be successfully verified on encryption drives, the firmware cannot be downloaded onto the WDC encryption drives. Failures to authenticate the firmware image will result in Check Condition with KCQ 5/26/9a (FRU 0). The act of issuing a firmware download to the drive will result in an implicit close of all open sessions at the security layer.

11.7 Revert Feature

WDC has extended TCG Enterprise to include the TCG Opal Revert method. Revert enables the customer, as needed by organizational policy, to overwrite existing TCG settings to the default values that were written during manufacturing.

Revert introduces a new TCG authority, PSID, to the Admin SP. During manufacturing, the PSID is hashed, and the digest is stored in a reserved area inside the drive. Also during manufacturing, the PSID is printed, in plaintext, on the drive's physical, external label. The PSID PIN cannot be accessed via the drive's interface, and it cannot be changed.

Below is the procedure to execute Revert:

- Start Session on the Admin SP
- Authenticate to the PSID authority
- Execute the Revert Method
- Successful completion of Revert automatically ends the TCG session

Notes for Revert include:

- Revert execution that encounters an error does not close the TCG session
- Reset of the drive during Revert will cause the subsequent power up sequence to be extended while Revert finishes its work

Table 318 PSID Authority Added to 'Admin SP' Authority Table

UID	Name	Common Name	IsClass	Class	Enabled	Operation	Credential
0000 0009 0001 FF01	PSID	PhysicalDriveOwner	F	Null	T	Password	C_PIN_PSID

Table 319 PSID Addition to ‘Admin SP’ C_PIN table

UID	Name	Common Name	PIN	CharSet	TryLimit	Tries	Persistence
00 00 00 09 00 01 FF 01	C_PIN_PSID	PhysicalDriveOwner	VU	Null	0	0	FALSE

Table 320 Additions to ‘Admin SP’ Access Control Table

InvokingID	MethodID	ACL	GetACLACL
AdminSPObj 00 00 02 05 00 00 00 01	Revert 00 00 00 06 00 00 02 02	ACE_SP_SID_ACE_SP_PSID 00 00 00 08 00 01 00 E0	ACE_Anybody 00 00 00 08 00 00 00 01
PSID 00 00 00 09 00 01 FF 01	Get 00 00 00 06 00 00 00 06	Anybody 00 00 00 08 00 00 00 01	Anybody 00 00 00 08 00 00 00 01
PSID 00 00 00 09 00 01 FF 01	Set 00 00 00 06 00 00 00 07	ACE_Makers_Set_Enabled 00 00 00 08 0003 00 01	Anybody 00 00 00 08 00 00 00 01
C_PIN_PSID 00 00 00 0B 00 01 FF 01	Get 00 00 00 06 00 00 00 06	ACE_C_PIN_Get_PSID_NoPIN_UID 00 00 00 80 00 01 00 E1	Anybody 00 00 00 08 00 00 00 01

New ACE table entries related to Revert are illustrated in Table 318.

11.8 Ports

The ports capability is an WDC feature which is not a requirement under TCG Enterprise SSC. In order to use the ports capabilities on encryption drives, the user must successfully authenticate. Once a user successfully authenticates, they may change the state of any of the ports at any time during an active session to either the locked or unlocked state. The exception of having to authenticate, is anyone can use the Get Firmware Download Port Values command without authenticating. The functionality and definition of these ports is shown below in a table.

The feature does make use of the TCG structures and tables. An additional table, the ports table, has been implemented, and additional entries were made to the Admin SP ACE table and the Admin SP AccessControl Table. The ports table and the modified TCG SSC tables are shown below

Table 321 Ports Functionality

Port Name	Description
Firmware Download	This port has 2 valid states: locked and unlocked. On encryption drives, the download port is unlocked initially, Lock On Reset is "Null". Code can be downloaded onto the drive after the signature is successfully verified. If the signature cannot be verified successfully, no firmware can be downloaded to the drive. The user can change the state of the firmware download port only after authentication. On non-encryption drives, this port will be set to unlocked at the factory, and the state cannot be changed by the user. Firmware will be downloaded to the non-encryption drive through this port without verification of the signature.
Diagnostics	This port has 2 valid states: locked and unlocked. This port allows WDC access to modify any TCG table or key. In order to open this port both the SID and the Maker authorities need to be authenticated. The purpose of this port is to aid WDC in debugging

Table 322 Ports Table

UID	Name	LockOnReset	PortLocked
00 01 00 02 00 01 00 02	Firmware_Dload_Port	Null	FALSE
00 01 00 02 00 01 00 01	Diagnostic_Port	PowerCycle	TRUE

Table 323 Modified 'Admin SP' ACE Table

UID	Name	Cmn Name	Boolean Expression	Row Start	Row End	Column Start	Column End
00 00 00 08 00 00 00 01	Anybody	""	00 00 00 09 00 00 00 01	Null	Null	""	""
00 00 00 08 00 00 00 03	Makers	""	00 00 00 09 00 00 00 03	Null	Null	""	""
00 00 00 08 00 00 02 01	SID	""	00 00 00 09 00 00 00 06	Null	Null	""	""
00 00 00 08 00 00 8C 03	SID_SetSelf	""	00 00 00 09 00 00 00 06	Null	Null	"PIN"	"PIN"
00 00 00 08 00 00 8C 04	MSID_Get	""	00 00 00 09 00 00 00 01	Null	Null	"PIN"	"PIN"
00 00 00 08 00 00 8C 05	SID_Set Makers	""	00 00 00 09 00 00 00 06	Null	Null	"Enabled"	"Enabled"
00 00 00 08 00 00 8C 06	SID_Makers_SetDiag	""	00 00 00 09 00 00 00 06 And 00 00 00 09 00 00 00 03	Null	Null	"PortLocked"	"PortLocked"
00 00 00 08 00 00 8C 07	SID_Makers_GetDiag	""	00 00 00 09 00 00 00 06 And 00 00 00 09 00 00 00 03	Null	Null	"PortLocked"	"PortLocked"
00 00 00 08 00 00 8C 08	SID_SetPort	""	00 00 00 09 00 00 00 06	Null	Null	"PortLocked"	"PortLocked"
00 00 00 08 00 00 8C 09	SID_GetPort	""	00 00 00 09 00 00 00 06	Null	Null	"LockOnReset"	"PortLocked"
00 00 00 80 00 01 00 E1	ACE_C_PIN_Get_PSID_ NoPIN	""	00 00 00 09 00 00 00 01	Null	Null	""	""
00 00 00 08 00 01 00 E0	ACE_SP_PSID	""	00 00 00 09 00 01 FF 01	Null	Null	""	""
00 00 00 09 00 01 FF 01	ACE_Makers_Set_Enabled	""	00 00 00 09 00 00 00 06	Null	Null	""	""

The last 3 lines of the table are additional entries required for Revert. The 2 lines of the table are the additional entries required to implement the firmware download port.

Table 324 Modified 'Admin SP' Access Control Table (part 1 of 2)

Row Number	UID	Invoking ID	Method ID	Common Name	ACL	Log	Add ACE ACL	Remove ACE ACL	Method ID
VU	VU	00 00 00 00 00 00 00 01 (This SP)	00 00 00 06 00 00 00 0C (Authenticate)	Anybody Authenticate Admin SP	00 00 00 08 00 00 00 01 (Anybody)	None	Null	Null	00 00 00 06 00 00 00 0C (Authenticate)
VU	VU	00 00 00 09 00 00 00 00 (Authority table)	00 00 00 06 00 00 00 08 (Next)	Makers-Next-Authority table	00 00 00 08 00 00 00 03 (Makers)	None	Null	Null	00 00 00 08 00 00 00 03 (Makers)
VU	VU	00 00 00 09 00 00 00 01 (Anybody Authority object)	00 00 00 06 00 00 00 06 (Get)	Anybody-Get-Anybody Authority Object	00 00 00 08 00 00 00 01 (Anybody)	None	Null	Null	00 00 00 08 00 00 00 01 (Anybody)
VU	VU	00 00 00 09 00 00 00 03 (Makers Authority object)	00 00 00 06 00 00 00 06 (Get)	Anybody-Get-Anybody Authority Object	00 00 00 08 00 00 00 03 (Makers)	None	Null	Null	00 00 00 08 00 00 00 03 (Makers)
VU	VU	00 00 00 09 00 00 00 06 (SID Authority object)	00 00 00 06 00 00 00 06 (Get)	SID-Get-SID Authority Object	00 00 00 08 00 00 02 01 (SID)	None	Null	Null	00 00 00 08 00 00 02 01 (SID)

Table 325 Modified 'Admin SP' Access Control Table (part 2 of 2)

Row Number	UID	Invoking ID	Method ID	Common Name	ACL	Log	Add ACE ACL	Remove ACE ACL	Method ID
VU	VU	00 00 00 0B 00 00 00 00 (C_PIN table)	00 00 00 06 00 00 00 08 (Next)	Makers-Next-C_ PIN table	00 00 00 08 00 00 00 02 (Makers)	None	Null	Null	00 00 00 08 00 00 00 02 (Makers)
VU	VU	00 00 00 0B 00 00 00 01 (SID C_PIN object)	00 00 00 06 00 00 00 07 (Set)	SID_Set Self-Set-SID_C_ PIN object	00 00 00 08 00 00 8C 03 (SID_SetSelf)	None	Null	Null	00 00 00 08 00 00 02 01 (SID)
VU	VU	00 00 00 0B 00 00 84 02 (MSID C_PIN object)	00 00 00 06 00 00 00 06 (Get)	MSID_Get-Get-MSID C_PIN object	00 00 00 08 00 00 8C 04 (MSID_Get)	None	Null	Null	00 00 00 08 00 00 02 01 (SID)
VU	VU	00 00 00 09 00 00 00 03 (Makers Authority object)	00 00 00 06 00 00 00 07 (Set)	SID_SetMakers-Set-Makers Authority Object	00 00 00 08 00 00 8C 05 (SID_SetMakers)	None	Nul	Nul	00 00 00 08 00 00 02 01 (SID)
VU	VU	00 00 00 00 00 00 00 01 (ThisSP)	00 00 00 06 00 00 06 01 (Random)	Anybody-Random	00 00 00 08 00 00 00 01 (Anybody)	None	Nul	Nul	00 00 00 08 00 00 00 01 (Anybody)
VU	VU	00 01 00 02 00 01 00 02	00 00 00 06 00 00 00 07	SID_Set_Dload	SID_SetPort	None	Nul	Nul	00 00 00 08 00 00 02 01 (SID)
VU	VU	00 01 00 02 00 01 00 02	00 00 00 06 00 00 00 06	SID_GetDload	SID_GetPort	None	Nul	Nul	00 00 00 08 00 00 02 01 (SID)
VU	VU	00 01 00 02 00 01 00 01	00 00 00 06 00 00 00 07	SID_Makers_ SetDiag	SID_Makers_Set Diag	None	Nul	Nul	00 00 00 08 00 00 02 01 (SID)
VU	VU	00 01 00 02 00 01 00 02	00 00 00 06 00 00 00 06	SID_Makers_ SetDiag	SID_Makers_Set Diag	None	Nul	Nul	00 00 00 08 00 00 02 01 (SID)

The last 2 lines of the table are the additional entries required to implement the firmware download port.

11.9 MSID

The MSID is set for each drive at the time of manufacturing to the serial number concatenated 4 times, to create a 32 byte password. Thus, as an example, if the serial number of a drive is abcd1234, the MSID would then be set to abcd1234abcd1234abcd1234abcd1234. In TCG use cases such as “erase” or “repurpose”, this will be the MSID that is restored to the drive.

WDC serial numbers are unique and are generated according to the following general rules:

- Maximum length of the serial number is 8 characters
- Serial numbers do not contain the characters “I" or "O".

11.10 Logging

WDC logging functions will not record any sensitive data such as customer plain text data, passwords, encryption keys or wrapping keys.

11.11 Number of Sessions

The WDC implementation supports 1 active session at a time. In the case when a session is active and a new session is requested, the drive answers the host with SP_BUSY. This covers the following 2 scenarios.

- If an SP is in session and an attempt is made to start a second session with the same SP.
- If an SP is in session and an attempt is made to start a second session with a different SP.

11.12 Number of Bands

The Enterprise SSC specification calls for support of up to 1024 bands. The WDC implementation supports a maximum of 6 bands.

Bands must be 4K aligned. This means Band start (Range start) and Band size (Range size) must be 4K aligned.

11.13 Number of COMIDs

The WDC Enterprise SSC implementation supports 2 COMIDs, the minimum requirement in the Enterprise SSC specification. Only 1 COMID can be in use at any time.

11.14 Locked and Unlocked Behavior

11.14.1 T10 SCSI Commands

The table below describes how basic T10 SCSI commands behave on encryption drives in the locked and unlocked states.

Table 326 T10 SCSI Commands Behavior Table (part 1 of 2)

Command	Unlocked	Locked
FORMAT UNIT (04)	OEM	Command can't be executed when locked. Must unlock with MSID or password, before formatting.
INQUIRY (12)	OEM	OEM
LOG SELECT (4C)	OEM	OEM
LOG SENSE (4D)	OEM	OEM-no access to customer data, will get some log information.
MODE SELECT (15)	OEM	OEM
MODE SELECT (55)	OEM	OEM
MODE SENSE (1A)	OEM	OEM
MODE SENSE (5A)	OEM	OEM
PERSISTENT RESERVE IN (5E)	OEM	OEM
PERSISTENT RESERVE IN (5F)	OEM	OEM
PRE-FETCH (34)	OEM	MSID only - limits DRAM accessibility. This is a read function.
READ (6) - (08)	OEM	Ent_A authorized only
READ (10) - (28)	OEM	Ent_A authorized only
READ (12) - (A8)	OEM	Ent_A authorized only
READ (16) - (88)	OEM	Ent_A authorized only
READ (32) - (7F/09)	OEM	Ent_A authorized only
READ BUFFER (3C)	OEM	OEM. Sensitive data cannot be snap shorted from DRAM.
READ CAPACITY (10) - (25)	OEM	OEM
READ CAPACITY (16) (9E/10)	OEM	OEM
READ DEFECT DATA (37)	OEM	OEM
READ DEFECT DATA (B7)	OEM	OEM
READ LONG (3E)	OEM	Ent_A authorized only
REASSIGN BLOCKS (07)	OEM	Command access denied if the effective range is locked.
RECEIVE DIAGNOSTICS RESULTS (1C)	OEM	OEM
RELEASE (17)	OEM	OEM
RELEASE (57)	OEM	OEM
REPORT DEVICE IDENTIFIER (A3/05)	OEM	OEM.
REPORT LUNS (A0)	OEM	OEM.
REPORT SUPPORTED OPERATION CODES (A3/0C)	OEM	OEM.
REPORT SUPPORTED TASK MANAGEMENT FUNCTIONS (A3/0D)	OEM	OEM
REQUEST SENSE (03)	OEM	OEM
RESERVE (16)	OEM	OEM
RESERVE (56)	OEM	OEM
REZERO UNIT (01)	OEM	OEM

Table 327 T10 SCSI Commands Behavior Table (part 2 of 2)

Command	Unlocked	Locked
SEND DIAGNOSTIC (1D)	OEM	Customer specific.
SET DEVICE IDENTIFIER (A4/06)	OEM	OEM.
START STOP UNIT (1B)	OEM	OEM
SYNCHRONIZE CACHE (10) - (35)	OEM	OEM
SYNCHRONIZE CACHE (16) - (91)	OEM	OEM
TEST UNIT READY (00)	OEM	OEM
VERIFY (2F)	OEM	Command access denied if the effective range is locked.
VERIFY (12) - (AF)	OEM	Command access denied if the effective range is locked.
VERIFY (16) - (8F)	OEM	Command access denied if the effective range is locked.
VERIFY (32) - (7F/0A)	OEM	Command access denied if the effective range is locked.
WRITE (6) - (0A)	OEM	Command access denied if the effective range is locked.
WRITE (10) - (2A)	OEM	Command access denied if the effective range is locked.
WRITE (12) - (AA)	OEM	Command access denied if the effective range is locked.
WRITE (16) - (8A)	OEM	Command access denied if the effective range is locked.
WRITE (32) - (7F/0B)	OEM	Command access denied if the effective range is locked.
WRITE AND VERIFY (10) - (2E)	OEM	Command access denied if the effective range is locked.
WRITE AND VERIFY (12) - (AE)	OEM	Command access denied if the effective range is locked.
WRITE AND VERIFY (16) - (8E)	OEM	Command access denied if the effective range is locked.
WRITE AND VERIFY (32) - (7F/0C)	OEM	Command access denied if the effective range is locked.
WRITE BUFFER (3B) (T10)	OEM (write DRAM on to drive)	OEM
WRITE BUFFER (3B) (For FW download)	FW is signed and downloaded	OEM. The write buffer command only functions to write to the buffer.
WRITE LONG (3F)	OEM	Per TCG and T10 specification. Ent_A authorized only.
WRITE SAME (41)	OEM	Ent_A authorized only
WRITE SAME (16) - (93)	OEM	Ent_A authorized only
WRITE SAME (32) - (7F/0D)	OEM	Ent_A authorized only
SECURITY_IN	OEM	Per TCG spec. Contains TCG payload.
SECURITY_OUT	OEM	Per TCG spec. Contains TCG payload.

11.14.2 TCG SSC Commands

The table below describes how the required TCG Enterprise SSC commands behave on encryption drives in the locked and unlocked states. The TCG Enterprise requires the implementation of the Base, Admin, Locking, and Crypto Templates.

Table 328 TCG Enterprise SSC Commands Behavior -1

Command	Description	unlocked	Locked
Session Management	There are two types of sessions: 1) Read-Only session 2) Read-Write session. The SSC requires us to support Read-Write sessions. Read-Only session is not allowed. A session is always initiated by the host. See the "Write" parameter in the Start Session method description @ TCG Core 5.2.3.1, and see SSC requirement in SSC 6.2.1.2.		
Properties	Returns session properties to host.	N/A	N/A
Start Session	Start a session	N/A	N/A
Syc Session	Response to say session successfully started.	N/A	N/A
Close Session	End (Close) a session	N/A	N/A

Table 329 TCG Enterprise SSC Commands Behavior -2

Command	Description	unlocked	Locked
Discovery	Allows the host to discover a TCG drive, its properties, and table values.		
Level 0	Discovery request sent by host as IF-RCV command. Security Protocol = 0x01, COMID=0x0001	N/A	N/A
Level 1	Request basic TPER capabilities via properties using host messaging.	Uses properties method.	Uses properties method.
Level 2	TCG methods retrieve table cell values.	See methods below.	See methods below.

Table 330 TCG Enterprise SSC Commands Behavior -3

Command	Description	unlocked	Locked
Cryptographic Template			
Random	This is the only required method in the crypto template for SSC. It is a random number generator in software.	N/A - Not related to bands/data on drive. Authentication required.	N/A - Not related to bands/data on drive. Authentication required.

Table 331 TCG Enterprise SSC Commands Behavior -4

Command	Description	unlocked	Locked
Base Template	Mandatory		
Set	Sets a value in a table	N/A - table operations. Not related to bands/data on drive.	N/A - table operations. Not related to bands/data on drive.
Get	Gets (reads) a value in a table	N/A - table operations. Not related to bands/data on drive.	N/A - table operations. Not related to bands/data on drive.
ParamCheck LRC	TPer implements param check LRC (longitudinal Redundancy Check) on get/set method calls on PIN value	N/A	N/A
Next	Iterates over all the rows of a table. Method requires user to specify "where" (row in table) and a "count". If where not specified, 1st row in table is used. For count not specified, default is number of last row in table. Returns 0 or more row number/uidref pairs currently in use in table, per parameters specified.	N/A - table operations. Not related to bands/data on drive.	N/A – table operations. Not related to bands/data on drive.
Authenticate	Authenticate an authority within a session (session must have successfully begun).	Must be authorized.	Must be authorized.
GatACL	Returns contents of access controls association's ACL stored in Method Table. The result is a list of UIDREFS to ACE objects.	N/A - table operations. Not to do with bands/data on drive.	N/A – table operations. Not related to bands/data on drive.

Table 332 TCG Enterprise SSC Commands Behavior -5

Command	Description	unlocked	Locked
Locking Template	Mandatory		
Erase	Cryptographically erases user data in a specified LBA range and resets the access control (locking) of that LBA range	Can erase if authorized.	Generates error.

11.15 Error Codes

All error codes are compliant with the TCG Core specification and SIIF, except in the following case:

- The maximum sessions allowed at any single time is 1. When a session is active and a new session is requested, the drive answers the host with SP_BUSY, instead of NO_SESSIONS_AVAILABLE.

11.16 Customer Specific Requirements

This specification does not cover customer-specific requirements. Customer-specific requirements are submitted by the customer to WDC in the form of a customer-specification document.

11.17 FIPS140 Cryptographic Officer Instructions

These instructions, to the Cryptographic Officer of FIPS140 models, are of paramount importance for the correct deployment and operation of the drive. The Cryptographic Officer is a trusted operator in the delivery and operation of the drive. ***Cryptographic Officers shall faithfully execute these instructions or intended security policies can fail.***

The Security Policy may be downloaded from the NIST/CMVP website. The FIPS140 model numbers, firmware versions and hardware versions are also posted there:

(http://csrc.nist.gov/groups/STM/cmvp/documents/140-1/140val-all.htm)

11.17.1 Physical Security

Verify that the drive has not been tampered with by inspecting the tamper evidence labels as described in the Security Policy.

11.17.2 Security Protocol Parameters

11.17.2.1 Security Protocol Information Description Overview

The security protocol information security protocol (i.e., the SECURITY PROTOCOL field set to 00h in a SECURITY PROTOCOL IN command) returns security protocol related information. A SECURITY PROTOCOL IN command in which the SECURITY PROTOCOL field is set to 00h is not associated with a previous SECURITY PROTOCOL OUT command and shall be processed without regard for whether a SECURITY PROTOCOL OUT command has been processed.

If the SECURITY PROTOCOL IN command is supported, the SECURITY PROTOCOL field set to 00h shall be supported as defined in this standard.

11.17.2.2 CDB Description

If the SECURITY PROTOCOL field is set to 00h in a SECURITY PROTOCOL IN command, the contents of the SECURITY PROTOCOL SPECIFIC field are defined as in the table.

Table 333 SECURITY PROTOCOL SPECIFIC Field for SECURITY PROTOCOL IN Protocol 00h

Type	Code	Description
M	0000h	Supported security protocol list
M	0001h	Certificate data
O	0002h	Security compliance information
	all others	Reserved

All other CDB fields for SECURITY PROTOCOL IN command shall meet the requirements stated in Each time a SECURITY PROTOCOL IN command with the SECURITY PROTOCOL field set to 00h is received, the device server shall transfer the data defined in 11.17.2.1 starting with byte 0.

11.17.2.2.1 Supported Security Protocols List Description

If the SECURITY PROTOCOL field is set to 00h and the SECURITY PROTOCOL SPECIFIC field is set to 0000h in a SECURITY PROTOCOL IN command, then the parameter data shall have the format shown in the table.

Table 334 Supported Security Protocols SECURITY PROTOCOL IN Parameter Data

Byte	Bit							
	7	6	5	4	3	2	1	0
0 - 5	Reserved							
6 - 7	SUPPORTED SECURITY PROTOCOL LIST LENGTH (m-7)							
Supported security protocol list								
8	SUPPORTED SECURITY PROTOCOL (00h) [first]							
…	⋮							
m	SUPPORTED SECURITY PROTOCOL [last]							
m+1	Pad bytes (if any)							
…								
n								

- The **SUPPORTED SECURITY PROTOCOL LIST LENGTH** field indicates the total length, in bytes, of the supported security protocol list that follows.
- Each **SUPPORTED SECURITY PROTOCOL** field in the supported security protocols list shall contain one of the security protocol values supported by the logical unit. The values shall be listed in ascending order starting with 00h.
- **Pad bytes** may be appended so the total data length conforms to the ALLOCATION LENGTH field requirements. Pad bytes shall have a value of 00h.

11.17.2.2.2 Certificate Data Description

11.17.2.2.2.1 Certificate Overview

A certificate is either an X.509 Public Key Certificate (see 11.17.2.2.2.2) or an X.509 Attribute Certificate (see 11.17.2.2.2.3) depending on the capabilities of the logical unit.

If the SECURITY PROTOCOL field is set to 00h and the SECURITY PROTOCOL SPECIFIC field is set to 0001h in a SECURITY PROTOCOL IN command, then the parameter data shall have the format shown:

Table 335 Certificate Data SECURITY PROTOCOL IN Parameter Data

Byte	Bit							
	7	6	5	4	3	2	1	0
0 - 1	Reserved							
2 - 3	CERTIFICATE LENGTH (m-3)							
4 - m	CERTIFICATE							
(m+1) - n	Pad bytes (if any)							

- **CERTIFICATE LENGTH** field indicates the total length, in bytes, of the certificate or certificates that follow. The length may include more than one certificate. If the device server doesn't have a certificate to transfer, the CERTIFICATE LENGTH field shall be set to 0000h.
- **CERTIFICATE** is either an X.509 Public Key Certificate or an X.509 Attribute Certificate depending on the capabilities of the logical unit.
- **Pad bytes** may be appended so the total data length conforms to the ALLOCATION LENGTH field requirements. Pad bytes shall have a value of 00h.

11.17.2.2.2.2 Public Key Certificate Description

RFC 5280 defines the certificate syntax for certificates consistent with X.509v3 Public Key Certificate Specification.

11.17.2.2.2.3 Attribute Certificate Description

RFC 3281 defines the certificate syntax for certificates consistent with X.509v2 Attribute Certificate Specification.

11.17.2.2.3 Security Compliance Information Description

11.17.2.2.3.1 Security Compliance Information Overview

The security compliance information parameter data contains information about security standards that apply to this SCSI target device.

If the SECURITY PROTOCOL field is set to 00h and the SECURITY PROTOCOL SPECIFIC field is set to 0002h in a SECURITY PROTOCOL IN command, then the parameter data shall have the format shown:

Table 336 Security Compliance Information SECURITY PROTOCOL IN Parameter Data

Byte	Bit							
	7	6	5	4	3	2	1	0
0 - 3	SECURITY COMPLIANCE INFORMATION LENGTH (m-3)							
Compliance descriptors								
4	Compliance descriptor [first]							
…	⋮							
n	Compliance descriptor [last]							
m+1	Pad bytes (if any)							
…								
n								

- The **SECURITY COMPLIANCE INFORMATION LENGTH** field indicates the total length, in bytes, of the compliance descriptors that follows.
- Each **Compliance descriptor** field in the supported security protocols list shall contain one of the security protocol values supported by the logical unit. The values shall be listed in ascending order starting with 00h.
- **Pad bytes** may be appended so the total data length conforms to the ALLOCATION LENGTH field requirements. Pad bytes shall have a value of 00h.

11.17.2.2.3.2 Compliance Descriptor Overview

The format of a compliance descriptor in the security compliance information SECURITY PROTOCOL IN parameter data is shown in table.

Table 337 Compliance Descriptor Format

Byte	Bit							
	7	6	5	4	3	2	1	0
0 - 1	COMPLIANCE DESCRIPTOR TYPE							
2 - 3	Reserved							
4 - 7	COMPLIANCE DESCRIPTOR LENGTH (n-3)							
8 - n	Descriptor specific information							

- The **COMPLIANCE DESCRIPTOR TYPE** field indicates the format of the descriptor specific information. The security compliance information SECURITY PROTOCOL IN parameter data may contain more than one compliance descriptor with the same value in the COMPLIANCE DESCRIPTOR TYPE field.

Table 338 COMPLIANCE DESCRIPTOR TYPE Field

Code	Description	Related Standards	Reference
0001h	Security requirements for cryptographic modules	FIPS 140-2 FIPS 140-3	**11.17.2.2.3.3**
All others	Reserved		

- The **COMPLIANCE DESCRIPTOR LENGTH** field indicates the number of bytes that follow in the compliance descriptor.
- The contents of the **Descriptor specific information** depend on the value in the COMPLIANCE DESCRIPTOR TYPE field.

11.17.2.2.3.3 FIPS 140 Compliance Descriptor

The FIPS 140 compliance descriptor contains information that may be used to locate information about a FIPS 140 certificate associated with the SCSI target device. The SCSI target device may or may not be operating in the mode specified by that certificate.

Table 339 FIPS 140 Compliance Descriptor

Byte	Bit							
	7	6	5	4	3	2	1	0
0 - 1	COMPLIANCE DESCRIPTOR TYPE (0001h)							
2 - 3	Reserved							
4 - 7	COMPLIANCE DESCRIPTOR LENGTH (0000 0208h)							
8	RELATED STANDARD							
9	OVERALL SECURITY LEVEL							
10 - 15	Reserved							
16 - 143	COMPLIANCE DESCRIPTOR HARDWARE VERSION							
144 - 271	COMPLIANCE DESCRIPTOR VERSION							
272 - 527	COMPLIANCE DESCRIPTOR MODULE NAME							

- The **COMPLIANCE DESCRIPTOR TYPE** field and **COMPLIANCE DESCRIPTOR LENGTH** field are defined in 11.17.2.2.3.2 Compliance Descriptor Overview and shall be set as shown in Table 339 for the FIPS 140 compliance descriptor.
- The **RELATED STANDARD** field (see Table 340, Table 341) is an ASCII data field that indicates the related standard described by this compliance descriptor.

Table 340 RELATED STANDARD Field

Code	Related Standards
32h	FIPS 140-2
33h	FIPS 140-3
All others	Reserved

- The **OVERALL SECURITY LEVEL** field is an ASCII data field that indicates the FIPS 140 overall security level that is reported by NIST or CSEC.
- The **COMPLIANCE DESCRIPTOR HARDWARE VERSION** field is null terminated, null padded data that indicates the version number of the firmware or software in the module, as reported by NIST or CSEC. The value in the **COMPLIANCE DESCRIPTOR VERSION** field is not related to the PRODUCT REVISION LEVEL field of standard INQUIRY data.
- The **COMPLIANCE DESCRIPTOR MODULE NAME** field is null terminated, null padded data that indicates the name or identifier of the cryptographic module, as reported by NIST or CSEC.

11.17.3 Certified Models, Hardware Versions and Firmware Versions

Use the INQUIRY command to read the model number and the firmware version from the device. Verify that these have been certified by comparing against the values published in the Security Policy or on the CMVP website Module Validation Lists:

11.17.4 Cryptographic Module Acceptance and Provisioning

Initialize cryptographic services by executing the following TCG methods:

1. StartSession and SyncSession using the 'AdminSP'.
2. Get 'MSID'.
3. Authenticate 'SID with MSID'; FAILURE indicates the Cryptographic Module has been tampered.
4. Set 'SID PIN' to your organizational value.
5. Set 'Makers.Enabled = FALSE' (required to enter FIPS mode).
6. Set ‘Firmware_Dload_Port.PortLocked = TRUE’
7. Set ‘Firmware_Dload_Port.LockOnReset = PowerCycle’
8. EndSession.
9. StartSession and SyncSession on the 'LockingSP'.
10. Authenticate 'EraseMaster with MSID'; FAILURE indicates the Cryptographic Module has been tampered.
11. Set 'EraseMaster PIN' to a new value.
12. Erase Band0
13. Authenticate 'BandMaster0 with MSID'; FAILURE indicates the Cryptographic Module has been tampered.
14. Set 'BandMaster0 PIN' to a new value.
15. Repeat Steps [12-14] for each Band required by the organizational policy.
16. EndSession.
    - OPTIONAL: Reset the SED

11.17.5 Zeroization of the Cryptographic Module

The TCG Revert method overwrites all security parameters to factory defaults,

1. StartSession and SyncSession on 'AdminSP'.
2. Authenticate 'PSID'.
3. Execute the TCG Revert method.
4. EndSession.

Reset the drive and clear the authentication values established during zeroization.

11.18 Switching between TCG Enterprise and ISE model

The SED model includes TCG/ISE switchable model.

A Life Cycle model for TCG is able to combine TCG and ISE (with ATA security feature) features in a single code and to switch back and forth between TCG and ISE modes. The Life Cycle model based on TCG Core specification [1] and TCG Opal SSC specification [4] is applied to TCG Enterprise.

The switching feature is managed by the Life Cycle model.

TCG / ISE combined code switches back and forth between TCG Enterprise mode and ISE mode by TCG operation. Ship ISE mode as default. Switching from ISE mode to TCG Enterprise mode is executed by “Authenticate BandMasterN or EraseMaster”. And switching from TCG Enterprise mode to ISE mode is executed by “Revert method with PSID”. AdminSP is working even if the drive is under ISE mode, and LockingSP is enabled when the drive is under TCG mode.

Revert methods initialize TCG setting and regenerates Encryption Key. That is, encrypted user data becomes to garbage data.

Port Lock cannot be used in ISE mode. Set Method to Port Table will fail when ISE mode.
In TCG/ISE switchable model of SAS, Level 0 Discovery always returns 1 as Locking Enabled.

11.19 Block SID Authentication

If a Block SID Authentication command has been successfully executed, SID Authentication will be blocked. This feature based on TCG Storage Feature Set: Block SID Authentication Specification Version 1.00 Published Revision 1.00.

If Block SID Authentication is supported, Level 0 Discovery returns feature descriptor as Feature Code = 0402.

The Block SID Authentication command is delivered by the transport IF-SEND command. There is no IF-RECV response to the Block SID Authentication command.

The Block SID Authentication command is defined as follows:

Command: IF_SENF

Protocol ID: 0x02

Transfer Length: Non-zero

ComID: 0x0005

Byte 0: Clear Events (0 or 1)

Bytes 1 to Transfer Length -1: Reserved (00)

Block SID Authentication state will be cleared by Power Cycle or Revert Method. If a Block SID Authentication command issued with Clear Events = 1, Block SID Authentication state is also cleared by Hardware Reset.

12 SCSI Sense Data

12.1 SCSI Sense Data Format Introduction

Sense data is returned as CHECK CONDITION status and as parameter data in response to the REQUEST SENSE command. The sense data returned by the drive can be in either fixed or descriptor format

12.1.1 Sense Data Format

Format of sense data returned as a CHECK_CONDITION_STATUS is based on the value of the D_SENSE bit in the Control mode page (See section 8.11.9 “Mode Page 0A (Control Mode Page Parameters)”). The REQUEST SENSE command may be used to request either the fixed format sense data or the descriptor format sense data (See section 8.38 “REQUEST SENSE (03)”).

12.1.2 Sense Data Length

Length of the sense data returned as part of CHECK_CONDITION status is determined by the sense data format:

a) Length of fixed format sense data is always 32 byte.

b) Length of descriptor format sense data is 60 byte (Generic Configuration)

For REQUEST SENSE command, length of the sense data is the number of bytes in the command’s Allocation Length or the sense data length described above, whichever is less.

12.1.3 Sense Data Response Code

The first byte of all sense data contains the RESPONSE CODE field that indicates the error type and format of the sense data. Table 341 “Sense data response codes.” shows the RESPONSE CODE values which may be returned by the drive

Table 341 Sense data response codes

Response Code	Error Type	Sense Data Format
70h	Current	Fixed
71h	Deferred	Fixed
72h	Current	Descriptor
73h	Deferred	Descriptor

Current Error: This indicates an error for the current command.

Deferred Error: This indicates that the error is for a previous command that has already returned a good status. Such commands are associated with the immediate bit or write caching. Format unit (04h) command is an example of a command that may return a deferred error.

12.2 Fixed Format Sense Data

Table 342 shows the format of fixed format of the sense data returned by the drive.

Table 342 Fixed Format Sense Data

Byte	Bit							
	7	6	5	4	3	2	1	0
0	Valid	Response Code (70h or 71h)						
1	RSVD = 0							
2	0		ILI	0	Sense Key			
3-6	(MSB) Information Bytes (LSB)							
7	Additional Sense Length							
8-11	(MSB) Command Specific Information (LSB)							
12	Additional Sense Code							
13	Additional Sense Code Qualifier							
14	FRU = 0							
15	SKSV	Sense-Key Specific Bits						
16-17	Sense-Key Specific Bytes							
18-19	Reserved = 0							
20-23	Vendor unique Error information							
24-29	Command Specific Information							
30-31	Reserved = 0							

12.2.1 Valid (Bit 7 of byte 0)

Table 343 Valid

0	The Information Bytes (byte 3 through 6) are not defined.
1	The Information Bytes (byte 3 through 6) contain a valid logical block address.

12.2.2 Response Code (Bit 6 - 0 of byte 0)

Table 344 Response Code

70h	Current Error. See section 12.1.3 “Sense Data Response Code” for more details.
71h	Deferred Error. See section 12.1.3 “Sense Data Response Code” for more details.

12.2.3 ILI: Incorrect Length Indicator (Bit 5 of byte 2)

The ILI bit is valid for the READ LONG (10) - (3E) command and WRITE LONG (10) - (3F) command only. ILI set to one and Valid Bit set to one indicates that the requested logical block length does not match the logical block length of the data on the medium for a Read Long or Write Long command. The Information field contains residue information about the error. ILI set to zero indicates there is no incorrect length condition.

Table 345 ILI

0 No Incorrect Length condition.

1 Incorrect Length Indicated.

Valid	ILI	Command = Read Long or Write Long	Description
x	0	x	No incorrect length condition
1	1	yes	Requested Logical block Length does not match the logical block length of the data on the disk

12.2.4 Sense Key (Bit 3 - 0 of byte 2)

The sense key provides generic categories in which error and exception conditions can be reported. Initiators would typically use sense keys for high level error recovery procedures.

0h **No Sense**
There is no sense key information to be reported for the logical unit.

1h **Recovered Error**
The last command completed successfully with some recovery action performed by the drive. More detailed information is available in the Additional Sense Code and Additional Sense Code Qualifier.

2h **Not Ready**
The logical unit addressed cannot be addressed. More detailed information is available in the Additional Sense Code and Additional Sense Code Qualifier.

3h **Medium Error**
The command terminated with an unrecoverable error condition caused by a flaw in the media or an error in the recorded data. More detailed information is contained in the Additional Sense Code and Additional Sense Code Qualifier.

4h **Hardware Error**
The drive detected an unrecoverable hardware error while performing a command or during a diagnostic test. More detailed information is contained in the Additional Sense Code and Additional Sense Code Qualifier.

5h **Illegal Request**
There was an illegal parameter in the command descriptor block or additional parameter supplied as data. If an invalid parameter is found in the CDB, then the command is terminated without altering the medium. If an invalid parameter is found in parameters supplied as data, then the drive might have altered the medium.

6h **Unit Attention**
Indicates that the drive entered in the 'Unit Attention Condition'. (See Section 10.1.5 “Unit Attention Condition”)

7h **Data Protect**

8h **Not used**

9h **Vendor Specific**

Ah **Not used**

Bh **Aborted command**
The drive aborted the command.

Ch-Dh **Not Implemented**

Eh **Miscompare**

Fh **Completed**

12.2.5 Information Bytes (Byte 3 through 6)

This field is only valid when VALID bit is one.

- ILI = 0: This field contains the unsigned LBA associated with the sense key. The LBA reported will be within the LBA range of the command as defined in the CDB.

Note: An LBA other than the command LBA may be reported on the Reassign Block (07h) command.

*Note: When the value that need to be stored in the Information field is greater than 0xFFFFFFFF (e.g. an LBA greater than 2TiB) the VALID bit will always be set to 0. To retrieve such information in such cases, the drive must be configured to return sense data in descriptor format. See section 8.11.9 "*Mode Page 0A (Control Mode Page Parameters)*" for details*

- ILI = 1: This field contains the difference (residue) of the requested length in bytes. Negative values are indicated by two's complement notation.

Table 346 Information Bytes (Byte 3 through 6)

Valid	ILI	Description
0	x	0x00000000 - (not used/invalid)
1	0	LBA
1	1	Residue of the requested length in bytes

12.2.6 Additional Sense Length (Byte 7)

Indicates the remaining number of bytes in the sense data. (It is always set to 18h.)

12.2.7 Command Specific Information (Byte 8 through 11)

This field is unused and will be set to zero.

12.2.8 Additional Sense Code/Qualifier (Byte 12 and 13)

The following table shows the description of the combination of Sense Key / Sense Code / Qualifier.

Table 347 Sense Code/Qualifier

Valid Sense Key, Code, Qualifier Combinations Used by the Drive			
Key	Code	Qual	Description
			Sense Key = No Sense
00	00	00	No Additional Sense Information
			0000 No Error
			Sense Key = No Sense
0	0B	01	SMART Temperature Warning
			1A02 SMART: Temperature Warning (No Sense)
			2A02 SMART: Temperature Warning (Recovered Sense)
			3A02 SMART: Temperature Warning (Unit Attention)
0	0B	03	SMART Background Self-Test Failure
			1A03 SMART: Background Self-Test Failure (No Sense)
			2A03 SMART: Background Self-Test Failure (Recovered Sense)
			3A03 SMART: Background Self-Test Failure (Unit Attention)
0	0B	04	SMART Background Pre-Scan Failure
			1A04 SMART: Background Pre-Scan Failure (No Sense)
			2A04 SMART: Background Pre-Scan Failure (Recovered Sense)
			3A04 SMART: Background Pre-Scan Failure (Unit Attention)
0	0B	05	Background Media Scan Failure Warning
			1A05 SMART: Background Media Scan Failure (No Sense)
			2A05 SMART: Background Media Scan Failure (Recovered Sense)
			3A05 SMART: Background Media Scan Failure (Unit Attention)
0	5D	20	Extreme Over-Temperature Warning
			1A22 SMART: Extreme Over-Temperature Warning (No Sense)
			2A22 SMART: Extreme Over-Temperature Warning (Recovered Sense)
			3A22 SMART: Extreme Over-Temperature Warning (Unit Attention)
0	5D	21	Milli-Actuator Error
			1A21 SMART: Milli-Actuator Error (No Sense)
			2A21 SMART: Milli-Actuator Error (Recovered Sense)
			3A21 SMART: Milli-Actuator Error (Unit Attention)
0	5D	50	Load/Unload cycle Count Warning
			1A50 SMART: Start/Stop Load/Unload Cycle Count Warning (No Sense)
			2A50 SMART: Start/Stop Load/Unload Cycle Count Warning (Recovered Sense)
			3A50 SMART: Start/Stop Load/Unload Cycle Count Warning (Unit Attention)
0	5D	5B	Spinup Retry Count Warning
			1A5B SMART: Spinup Retry Count Warning (No Sense)
			2A5B SMART: Spinup Retry Count Warning (Recovered Sense)
			3A5B SMART: Spinup Retry Count Warning (Unit Attention)
0	5D	61	FW Security At Risk
			1A12 SMART: FW Security At Risk (No Sense)
			2A12 SMART: FW Security At Risk (Recovered Sense)
			3A12 SMART: FW Security At Risk (Unit Attention)
0	5D	62	Read/Write Error Rate Warning
			1A32 SMART: Read Error Rate Warning (No Sense)
			2A32 SMART: Read Error Rate Warning (Recovered Sense)
			3A32 SMART: Read Error Rate Warning (Unit Attention)
			1A4A SMART: Write Error Rate Warning (No Sense)
			2A4A SMART: Write Error Rate Warning (Recovered Sense)
			3A4A SMART: Write Error Rate Warning (Unit Attention)
0	5D	63	Seek Error Rate Warning

			1A43 SMART: Seek Error Rate Warning (No Sense)
			2A43 SMART: Seek Error Rate Warning (Recovered Sense)
			3A43 SMART: Seek Error Rate Warning (Unit Attention)
0	5D	64	Spare Sector Availability Warning
			1A14 SMART: Spare Sector Availability Warning (No Sense)
			2A14 SMART: Spare Sector Availability Warning (Recovered Sense)
			3A14 SMART: Spare Sector Availability Warning (Unit Attention)
0	5D	66	Spinup Time Warning
			1A56 SMART: Spinup Time Warning (No Sense)
			2A56 SMART: Spinup Time Warning (Recovered Sense)
			3A56 SMART: Spinup Time Warning (Unit Attention)
0	5D	FD	Internal Environment Status Error
			1AFD SMART: Internal Environment Status Error (No Sense)
			2AFD SMART: Internal Environment Status Error (Recovered Sense)
			3AFD SMART: Internal Environment Status Error (Unit Attention)
0	5D	FF	Test Warning Threshold Reached
			1AFF SMART: Test Warning Threshold Reached (No Sense)
			2AFF SMART: Test Warning Threshold Reached (Recovered Sense)
			3AFF SMART: Test Warning Threshold Reached (Unit Attention)
0	5E	01	Idle_A Condition activated by timer
			1831 CMD: Power Mode Idle_A By Timer
0	5E	02	Standby_Z Condition activated by timer
			1834 CMD: Power Mode Standby_Z By Timer
0	5E	03	Idle_A Condition activated by Command
			1835 CMD: Power Mode Idle_A By Command
0	5E	04	Standby_Z Condition activated by Command
			1838 CMD: Power Mode Standby_Z By Command
0	5E	05	Idle_B Condition activated by timer
			1832 CMD: Power Mode Idle_B By Timer
0	5E	06	Idle_B Condition activated by Command
			1836 CMD: Power Mode Idle_B By Command
0	5E	07	Idle_C Condition activated by timer
			1833 CMD: Power Mode Idle_C By Timer
0	5E	08	Idle_C Condition activated by Command
			1837 CMD: Power Mode Idle_C By Command
0	5E	09	Standby_Y Condition activated by timer
			1839 CMD: Power Mode Standby_Y By Timer
0	5E	0A	Standby_Y Condition activated by Command
			183A CMD: Power Mode Standby_Y By Command
			Sense Key = Recovered Error
1	02	00	No Seek Complete
			141B Servo: Recovered Current error
			141D Servo: Recovered Seek timeout
			141F Servo: Recovered Seek error
			142B Servo: Recovered RRO Calibration timeout
			14A0 Servo: Recovered IDLEA Grab Error
			14A2 Servo: Recovered IDLEA Seek Error
			14A4 Servo: Recovered AVEDAC Error
			14A6 Servo: Recovered IDLEA Exit Timeout Error
			14A8 Servo: Recovered IDLEA Long Seek Error
			14AA Servo: Recovered IDLEA SID ACQ Error
			14CB Servo: Recovered IDLEA Check CMPLT Error
1	03	00	Peripheral Device Write Fault
			1733 Media: Recovered Read Write Abort Error
			1737 Media: Recovered Post Write Abort Error
			1739 Media: Recovered Post PES Check Write Abort Error
			17E0 Media: Recovered Write Splice Error

			1EC0 Media: Recovered R/W Abort Due to SSW Calibration Track
			1EC2 Media: Recovered R/W Abort Due to RAW TID
			1EC4 Media: Recovered R/W Abort Due to Burst In Progress
			1EC6 Media: Recovered R/W Abort Due to DSW Not Settled
			1EC8 Media: Recovered R/W Abort Due to Preheat
			1ECA Media: Recovered R/W Abort Due to HMA R/W Offset
			1ECC Media: Recovered R/W Abort Due to WCSBUSY Pro Check
			1ECE Media: Recovered R/W Abort Due to Vibration Condition (Other)
			1ED0 Media: Recovered R/W Abort Due to Vibration Condition (Estimator)
			1ED2 Media: Recovered R/W Abort Due to Vibration Condition (Predictor)
			1ED4 Media: Recovered R/W Abort Due to Vibration Condition (PES Error)
			1ED6 Media: Recovered R/W Abort Off Track Write Error
			1ED8 Media: Recovered R/W Abort RRO Field Misread Error
			1EDA Media: Recovered R/W Abort RRO Field Missing Error
			1EDC Media: Recovered R/W Abort Idle Seek Error
			1EDE Media: Recovered R/W Abort Seek Timeout Error
			1EE0 Media: Recovered R/W Abort Estimator Error
			1EE2 Media: Recovered R/W Abort Predictor Error
			1EE4 Media: Recovered R/W Abort PES Error
			1EE6 Media: Recovered R/W Abort RPC Resync Error
			1EE8 Media: Recovered R/W Abort PES Reset Error
			1EEA Media: Recovered R/W Abort SID Unlock Error
			1EEC Media: Recovered R/W Abort WCS Error
			1EEE Media: Recovered R/W Abort Hard Reset Error
			1EF0 Media: Recovered R/W Abort Shock Error
			1EF2 Media: Recovered R/W Abort Unlock Macro Error
			1EF4 Media: Recovered R/W Abort Sharp Error
			1EF6 Media: Recovered R/W Abort Aggressive Error
			1EF8 Media: Recovered R/W Abort VWI Limit Error
			1EFA Media: Recovered R/W Abort Gray Code Error
			1EFC Media: Recovered R/W Abort Linger Error
			1EFE Media: Recovered R/W Abort No STM Error
1	09	00	Track Following Error
			1421 Servo: Recovered Track following error
			1423 Servo: Recovered Track follow timeout
1	0C	01	Recovered Write Error with Auto Reallocation - Auto Reallocated
			D703 Media: Auto Reallocated Write Error
1	0C	03	Recovered Write Error - Recommend Reassignment
			1704 Media: Recovered Write Error - Recommend reassign
1	10	02	Recovered Application Tag Error
			17BA Media: Recovered Application Tag Error
1	10	03	Recovered Reference Tag Error
			17B8 Media: Recovered Reference Tag Error
1	11	14	Recovered LBA Write Correctable Error
			17CB Media: Recovered LBA Write Correctable Error
1	15	00	Random Positioning Error
			1712 Media: Recovered LBA MEDC Error
			1714 Media: Recovered Sector Overflow Error
			171A Media: Recovered Sector miss cause watchdog expire
			173D Media: Recovered Sector Miss Error
			176E Media: Correctable Channel Ready Error
			1770 Media: Recovered SID Timeout Error
			177C Media: Recovered Servo Area Timeout
			1780 Media: Recovered DLC SID Delay Timeout
			17B2 Media: Recovered Abort Window Error
			17EE Media: Recovered Sector Number Cylinder Error
1	16	00	Data Synchronization Mark Error

			1652 Channel: Recovered Read Gate Fault Error
			165C Channel: Recovered Mode Overlap Read Fault Error
			1724 Media: Recovered READ Overrun Servo Gate Active
			1735 Channel: Recovered No Sync Detected Error
			173B Media: Recovered Data Address Mark Error
			17AA Media: Recovered Read Overrun Error
1	16	01	Data Sync Error - Data Rewritten
			E70E Media: Recovered Data Address Mark Error - Rewritten
1	16	02	Data Sync Error - Recommend Rewrite
			E70F Media: Recovered Data Address Mark Error - Recommend Rewrite
1	16	03	Data Sync Error - Auto Reallocated
			D710 Media: Recovered Data Address Mark Error - Reassigned
1	16	04	Data Sync Error - Recommend Reassignment
			E711 Media: Recovered Data Address Mark Error - Recommend Reassign
1	17	00	Recovered ATA Stream Error
			17C4 Media: Recovered DRAM ECC Error
1	17	01	Recovered Data with Retries
			1718 Media: Recovered Sync Mark Retry Timeout
			171E Media: Recovered Read Latency Error
			1726 Media: Recovered Internal Write Catch Error
			172C Media: Recovered Data
			172E Media: Recovered Error on Last Data Read
			176C Media: Recovered MEDC Correctable Error
			1782 Media: Recovered Force Soft Error
			1784 Media: Recovered Channel Sector Marginal Error
			17B1 Media: Recovered track ecc recovery
			17E6 Media: Recovered NRZ Sector Marginal Error
1	17	06	Recovered Data Without LDPC - Data Auto-Reallocated
			D705 Media: Error With OTF Correction - Reassigned
1	17	07	Recovered Data Without LDPC - Recommend Reassignment
			E706 Media: Error With OTF Correction - Recommend Reassign
1	17	08	Recovered Data Without LDPC - Recommend Rewrite
			E707 Media: Error With OTF Correction - Recommend Rewrite
1	17	09	Recovered Data Without LDPC - Data Rewritten
			E708 Media: Error With OTF Correction - Rewritten
1	18	00	Recovered Data With LDPC
			1709 Media: Recovered Error With Offline Correction
			17AE Media: Recovered ECC Correctable Error
1	18	01	Recovered Data - Forced Channel Fault
			167E Channel: Recovered Forced Channel Fault Error
1	18	02	Recovered Data - Data Auto-Reallocated
			D70A Media: Error With Offline Correction - Reassigned
			D71C Media: Internal rewrite skipped
1	18	05	Recovered Data - Recommend Reassignment
			E70B Media: Error With Offline Correction - Recommend Reassign
1	18	06	Recovered Data With LDPC - Recommend Rewrite
			E70C Media: Error With Offline Correction - Recommend Rewrite
1	18	07	Recovered Data With LDPC - Data Rewritten
			170D Media: IWV Verify Soft error
			E70D Media: Error With Offline Correction - Rewritten
1	1C	00	Defect List Format Not Supported
			1746 Media: Recovered Defect List Format Not Supported Error
1	1C	01	Primary Defect List Not Found. Requested Format Not Supported
			1747 Media: Recovered Primary Defect List Not Found Error
1	1C	02	Grown Defect List Not Found. Requested Format Not Supported
			1748 Media: Recovered Grown Defect List Not Found Error
1	1F	00	Partial Defect List Transfer

			1749 Media: Recovered Partial Defect List Transferred Error
1	40	80	Primary Flash Not ready
			1138 BATS error: Primary Flash Not Ready
1	44	00	Internal Target Failure
			F132 GEM FH track read error
			1201 Sanity: Error In UEC Class
			1202 Sanity: Error In UEC Cause
			1301 Motor: Recovered internal error
			1303 Motor: Recovered Open Loop Commutation failure
			1305 Motor: Recovered No feedback detected error
			1307 Motor: Recovered Settle timeout
			1309 Motor: Recovered Gross speed error
			130B Motor: Recovered 12V OK error
			130D Motor: Recovered Speed error
			1311 Motor: Recovered Internal 12V not OK timeout
			1313 Motor: Recovered Inductive Sense measurement timeout
			1315 Motor: Recovered Spin Sense speed error
			1319 Motor: Recovered Target speed error
			131D Motor: Recovered Over current error
			1321 Motor: Recovered Negative regulator fault
			1323 Motor: Recovered Module overtemp error
			1325 Motor: Recovered 12V or 5V OK error
			1327 Motor: Recovered unknown error
			1365 Motor: Recovered Predriver Voltage Offset Calibration Error
			1367 Motor: Recovered Predriver BEMF Gain Calibration Error
			1369 Motor: Recovered Predriver BEMF Unload Calibration Error
			136F Motor: Recovered IDCS Calibration Measurement 1 Error
			1371 Motor: Recovered IDCS Calibration Measurement 2 Error
			1373 Motor: Recovered IDCS Calibration Saturation Error
			1375 Motor: Recovered IDCS Calibration Adjustment Error
			1377 Motor: Recovered Predriver VDUAL over current
			1379 Motor: Recovered Predriver NEG Chargepump Fault
			137B Motor: Recovered Predriver VGH Fault
			137D Motor: Recovered Predriver Ext Interrupt
			137F Motor: Recovered Predriver Ext Fault
			1381 Motor: Recovered PMIC Not Detected
			1383 Motor: Recovered Get MA Error
			1385 Motor: Recovered Unexpected HD on Ramp
			1387 Motor: Recovered VCPDSA Driver Failure
			1389 Motor: Recovered Motor Start Timeout
			138B Motor: Recovered Motor PMIC UV12
			138D Motor: Recovered Motor PMIC UV5
			138F Motor: Recovered Motor PMIC UV09
			1391 Motor: Recovered Motor PMIC OT12
			1393 Motor: Recovered Motor PMIC OT5
			1395 Motor: Recovered Motor PMIC EOTW12
			1397 Motor: Recovered Motor PMIC EOTW5
			1399 Motor: Recovered Motor PMIC OC12
			139B Motor: Recovered Motor PMIC OC5
			139D Motor: Recovered Motor PMIC OC09
			139F Motor: Recovered Motor PMIC OV12
			13A1 Motor: Recovered Motor PMIC OV5
			13A3 Motor: Recovered I2C READ Error
			13A5 Motor: Recovered I2C WRITE Error
			13A7 Motor: Recovered PMIC not supported
			1401 Servo: Recovered Requested rezero head does not exist
			1403 Servo: Recovered Back EMF movement in progress

			1405 Servo: Recovered Back EMF timeout error
			1407 Servo: Recovered ADC conversion timeout
			1409 Servo: Recovered Load/unload calibration error
			140B Servo: Recovered Invalid 5 volts
			140D Servo: Recovered Invalid 12 volts
			140F Servo: Recovered Invalid harmonic requested
			1415 Servo: Recovered Invalid temperature
			1417 Servo: Recovered Truncated rezero
			1419 Servo: Recovered Heads not loaded
			1425 Servo: Recovered KT Seek out of range
			1427 Servo: Recovered DAC Offset calibration error
			1429 Servo: Recovered Load speed error
			142D Servo: Recovered ADC Calibration error
			142F Servo: Recovered ADC Offset error
			1431 Servo: Recovered ADC Limit error
			1433 Servo: Recovered Balancer Resistance error
			1435 Servo: Recovered Balancer Resistance Limit error
			1437 Servo: Recovered First Cylinder error
			1439 Servo: Recovered Valid Cylinder error
			143B Servo: Recovered ADC Saturation error
			143D Servo: Recovered Latch Break timeout
			143F Servo: Recovered MR Resistance out of range error
			1441 Servo: Recovered VCM Retract error
			1443 Servo: Recovered Load Retry error
			1445 Servo: Recovered DFT Sharp error
			1447 Servo: Recovered Load/Unload state error
			1449 Servo: Recovered TFCR out-of-range error
			144B Servo: Recovered Measure GMR Timeout
			144D Servo: Recovered Coil Resistance Measurement Failure
			145F Servo: Recovered WCS Hang Error
			1461 Servo: Recovered DFT Timeout Error
			1463 Servo: Recovered SDM Timeout Error
			1465 Servo: Recovered RRO Write Error
			1467 Servo: Recovered Velocity Error
			1469 Servo: Recovered Start SID Incorrect Error
			146B Servo: Recovered End Sid Incorrect Error
			146D Servo: Recovered Measure GMR SDM Failure
			146F Servo: Recovered VCM Free Speed Error
			1471 Servo: Recovered Emergency Brake Timeout Error
			1473 Servo: Recovered Excessive Current Error
			1475 Servo: Recovered Excessive Velocity Error
			147D Servo: Recovered RROF SDM Timeout Error
			147F Servo: Recovered RROF Over Limit Error
			1482 Servo: Recovered Measure Asymmetry SDM Failure
			1486 Servo: Recovered Milli-Calibration Error
			148C Servo: Recovered Measure Qsamp SDM Failure
			148E Servo: Recovered Tilt Calibration Error
			1490 Servo: Recovered Tilt Numerical Error
			1496 Servo: Recovered DTID Inhibit Error
			1498 Servo: Recovered Waketime Error
			149A Servo: Recovered SHARP Pulse TFC Entry Error
			149C Servo: Recovered Heads Not Loaded FFSULI
			149E Servo: Recovered Load Abort FFSULI
			14AC Servo: Recovered ODCS Detect Error
			14AE Servo: Recovered Unexpected Motion Error
			14B0 Servo: Recovered BEMF Loop Error
			14B2 Servo: Recovered BEMF DTID Error

			14B4 Servo: Recovered BEMF Lock Error
			14B6 Servo: Recovered BEMF Fail Error
			14B8 Servo: Recovered BEMF Speed Error
			14BA Servo: Recovered Measure GTM SDM Failure
			14BC Servo: Recovered SAM2SG SDM Failure
			14BE Servo: Recovered Invalid MULTRG Descriptor Error
			14C0 Servo: Recovered Filter COEF Overflow
			14C2 Servo: Recovered WCS Watchdog Expire
			14C7 Servo: Recovered HD on RAMP SWCAL Unload
			14C9 Servo: Recovered HD on RAMP SWCAL IDsearch
			14CD Servo: Recovered IDLEA Time Base Duration
			14CF Servo: Recovered Emergency Brake Duration
			14D1 Servo: Recovered VCM Free Duration
			14D5 Servo: Recovered Search Mode Duration
			14D7 Servo: Recovered Invalid Seek Target
			14D9 Servo: Recovered safe zone seek error
			14DB Servo: Recovered head switch at safe zone fail
			1601 Channel/AE: Recovered Internal Logic Error
			1602 AE: Recovered IVC fault error
			1606 AE: Recovered AE Last Data Read Error
			1609 AE: Recovered TFC Short Error
			160B AE: Recovered Shorted MR Element Error
			1610 AE: Recovered ECS Shorted Fault
			1612 AE: Recovered ECS Open Fault
			1614 AE: Recovered ECS Fault
			1616 Channel: Recovered Channel Error
			1618 AE: Recovered STO current fault error
			161A AE: Recovered Open MR Element Error
			161C AE: Recovered IC Over Temperature Error
			161E AE: Recovered IP Clock Count Error
			1620 AE: Recovered DLC SVCLK Error
			1622 AE: Recovered Write Data BLS Error
			1624 AE: Recovered STO short fault error
			1626 AE: Recovered Power Supply Error
			1628 AE: Recovered Open Write Head Error
			162A AE: Recovered Write Transition Error
			162E Channel: Recovered Channel NRZ Clear Timeout Error
			1630 AE: Recovered SPE Low In Write Fault
			1632 AE: Recovered STO Open fault error
			1636 AE: Recovered Short Write Head Error
			163C AE: Recovered TFC Open Error
			163E AE: Recovered SoC DIE Temperature Dropped Below Warning
			163F AE: Recovered SoC DIE Temperature Above Fatal
			1646 AE: Recovered CHN Power Sequence Error
			1648 Channel: Recovered Reset Flag Error
			164A Channel: Recovered Gate Command Queue Underflow Error
			164C Channel: Recovered Sector Size Fault Error
			164E Channel: Recovered Last Split Fault Error
			1650 Channel: Recovered Servo-Servo Overlap Error
			1654 Channel: Recovered RWBI Out Fault Error
			1656 Channel: Recovered No Write Clock Error
			1658 Channel: Recovered No NRZ Clock Error
			165A Channel: Recovered Calibration Block Fault Error
			165E Channel: Recovered Gate Command Queue Overflow Error
			1660 Channel: Recovered Ending Write Splice Fault Error
			1662 Channel: Recovered Write Gate Overlap Fault Error
			1664 Channel: Recovered Write Gate Fault Error

			1666 Channel: Recovered Buffer Overflow Write Error
			1668 Channel: Recovered Buffer Underflow Write Error
			166A Channel: Recovered Write Parity Error
			166C Channel: Recovered Buffer Overflow Read Error
			166E Channel: Recovered CTG Wedge Slip Fault Error
			1670 Channel: Recovered CTG Packet Late Fault Error
			1672 Channel: Recovered Baseline Instability Count Late Error
			1674 Channel: Recovered Preamp Count Fault Error
			1676 Channel: Recovered Pfault Read Error
			1678 Channel: Recovered Pfault Write Error
			167A Channel: Recovered Last Data Fault Error
			167C Channel: Recovered WRPO Fault Error
			1680 Channel: Recovered PLLFloor Error
			1682 Channel: Recovered Loss lock Error
			1684 Channel: Recovered VGA Floor Error
			1686 Channel: Recovered Buffer EVGA Floor Error
			1688 Channel: Recovered TA Detector Error
			168A Channel: Recovered NPLD Error
			168C Channel: Recovered ZGR Flag Error
			168E Channel: Recovered DPLL Freq Flag Error
			1690 Channel: Recovered Massive Drop Out Detection Error
			1692 Channel: Recovered CTG Parameter Out of Bounds Error
			1694 Channel: Recovered Flaw Signal Sync Error
			1696 Channel: Recovered ACQ Flag Error
			1698 Channel: Recovered No Clock Error
			169A Channel: Recovered PLL Loss lock Error
			169E Channel: Recovered ADC Sample Not Ready Error
			16A2 Channel: Recovered Auto RST NRZ-Clock Error
			16A4 Channel: Recovered Write CRC Fault Error
			16A6 Channel: Recovered Read Synthesizer Loss of Lock Error
			16A8 Channel: Recovered RLL Parameter Error
			16AA Channel: Recovered FIFO Underflow Error
			16AC Channel: Recovered FIFO Overflow Error
			16AE Channel: Recovered Iterative Decoder Error
			16B0 Channel: Recovered Iterative Read Error
			16B2 Channel: Recovered Encoder Overflow Error
			16B4 Channel: Recovered Encoder Underflow Error
			16B6 Channel: Recovered Encoder RAM CRC Error
			16B8 Channel: Recovered Interface Fault
			16BC Channel: Recovered DiBit Timeout Error
			16BE Channel: Recovered MXP Write Fault
			16C0 Channel: Recovered Data Jam Error
			16C2 Channel: Recovered Code-Word Out Of Order Error
			16C4 Channel: Recovered Read RLL Buffer CRC Flag Error
			16C6 Channel: Recovered Write RLL Buffer CRC Flag Error
			16C8 Channel: Recovered CTG No SAM Detected Fault Error
			16CA Channel: Recovered ITI Adjust Preload Fault Track Error
			16CC Channel: Recovered WTG SRV Fault Error
			16CE Channel: Recovered CTG Engine Not Ready Fault Error
			16D0 Channel: Recovered LLI Abort Fault Error
			16D2 Channel: Recovered Retry Fault Error
			16D4 Channel: Recovered WTG Timeout Fault Error
			16D6 Channel: Recovered ITI Fault TS Transfer All Error
			16D8 Channel: Recovered ITI Data Fault Error
			16DC Channel: Recovered Data Jam Fault Error
			16DE Channel: Recovered Code-Word Out of Order Error
			16E0 Channel: Recovered RLL Initialization Timeout Error

			16E4 Channel: Recovered DLC out of criteria
			16E7 Channel: Recovered Mode Overlap Write Error
			16E9 Channel: Recovered Ready Fault Error
			16EB Channel: Recovered Synchronous Abort Done Error
			16ED Channel: Recovered NRZ Clear Fault Error
			16EF Channel: Recovered Collision Fault Error
			16F1 Channel: Recovered Read Synthesizer Precharge Fail Fault Error
			16F3 Channel: Recovered Servo Synthesizer Precharge Fail Fault Error
			16F5 Channel: Recovered Read Synthesizer Loss of Lock Error
			16F7 Channel: Recovered Fragment Number Fault Error
			16F9 Channel: Recovered Preamble Quality Monitor Fault Error
			1716 Media: Recovered Write Overrun Error
			1722 Media: Recovered WRITE Overrun Servo Gate Active
			1728 Media: Recovered S2S MAX Flag Fault
			172A Media: Recovered track ecc unrecoverable error
			1731 Media: Recovered Write Fault
			1744 Media: Recovered Sudden Stop Error
			1759 Media: Recovered Unknown Error
			1786 Media: Recovered LLI Underrun Error
			178C Media: Recovered FFSULI Timeout
			1792 Media: Recovered MEDC Write Data Not Ready Error
			1794 Media: Recovered DMA Timeout Error
			1798 Media: Recovered ID Not Found Error
			179C Media: Recovered Channel Read Timeout Error
			179E Media: Recovered End Sector PHSN Error on READ
			17B4 Media: Recovered Shock Sensor Error
			17C6 Media: Recovered DRAM ECC LBA Error
			17C8 Media: Recovered End Sector PHSN Error on WRITE
			17D1 Media: Recovered DCHW Hang
			17D4 Media: Recovered Parity PTR FIFO Error
			17D6 Media: Recovered Parity LBA FIFO Error
			17D8 Media: Recovered Parity Uncorrectable FIFO Error
			17DA Media: Recovered Status Uncorrectable FIFO Error
			17DC Media: Recovered Parity EDC SRAM Error
			17DE Media: Recovered REQ/ACK Handshake Error
			17E2 Media: Recovered Read Parity Error
			17E4 Media: Recovered EPO Error
			17E8 Media: Recovered AE Access Inhibit Error
			17EA Media: Recovered PTR FIFO Error
			17EC Media: Recovered LBA FIFO Error
			17F0 Media: Recovered Read Transfer Length Error
			17F2 Media: Recovered DS RDC Burst Error
			17F4 Media: Recovered SV RDC Burst Error
			17F6 Media: Recovered Channel AE WG Error
			17F8 Media: Recovered Dummy Error ERP MEAS
1	44	0B	Vendor Unique - Internal Target Failure
			130F Motor: Recovered Spindle Current error
			1317 Motor: Recovered Spin Sense timeout
			131F Motor: Recovered System clock watchdog error
			1329 Motor: Recovered VCM DAC watchdog error
			132B Motor: Recovered Module mid-die overtemp fault
			132D Motor: Recovered Module Vcmp hi-side overtemp fault
			132F Motor: Recovered Module Vcmn hi-side overtemp fault
			1331 Motor: Recovered Invalid standby RPM request
			1333 Motor: Recovered Invalid spin state request
			1335 Motor: Recovered Hardware retract timeout
			1337 Motor: Recovered thermal limit exceeded

			1339 Motor: Recovered Predriver fault
			133B Motor: Recovered Predriver Watchdog Fsys error
			133D Motor: Recovered Predriver Watchdog DAC error
			133F Motor: Recovered Predriver Speed Low error
			1341 Motor: Recovered Predriver UV Vboost error
			1343 Motor: Recovered Predriver NREG UV error
			1345 Motor: Recovered Predriver Ext NPOR error
			1347 Motor: Recovered Predriver Reg UV error
			1349 Motor: Recovered Predriver Under Voltage 12 Volt Supply error
			134B Motor: Recovered Predriver Under Voltage 5 Volt Supply error
			134D Motor: Recovered Predriver Over Voltage 12 Volt Supply error
			134F Motor: Recovered Predriver Under Voltage 1.8 Volt Supply error
			1351 Motor: Recovered Predriver Under Voltage 0.9 Volt Supply error
			1353 Motor: Recovered Predriver Under Voltage 1.5 Volt Supply error
			1355 Motor: Recovered Predriver Shock Detected error
			1357 Motor: Recovered Predriver Over Temperature error
			1359 Motor: Recovered Predriver Under Voltage 3.3 Volt Supply error
			135B Motor: Recovered Predriver Under Voltage 5 and 12 Volt Supply error
			135D Motor: Recovered Predriver Error in Enabling Power Saving Mode
			135F Motor: Recovered Predriver Fault in Auto Retract
			1361 Motor: Recovered Predriver Error in Utilizing External Power Supply
			1363 Motor: Recovered Predriver Regulator Supply Fault
			136B Motor: Recovered Predriver VCM Short Error
			136D Motor: Recovered Predriver NREG disable error
1	44	F9	Vendor Unique - Internal Target Failure
			1411 Servo: Recovered Sharp DRAM Parity error
			1413 Servo: Recovered Sharp DRAM Parity Rate error
			144F Servo: Recovered SHARP Parity Error
			1451 Servo: Recovered SHARP Parity Rate Error
			1453 Servo: Recovered SHARP Decode Error
			1455 Servo: Recovered SHARP Decode Rate Error
			1457 Servo: Recovered SHARP Timeout Error
			1459 Servo: Recovered SHARP Timeout Rate Error
			145B Servo: Recovered SHARP Other Error
			145D Servo: Recovered SHARP Other Rate Error
1	5D	00	NVC Non Meta Data Error
			FF73 NVC Non Meta Data Error
1	5D	01	Self Test Error
			1A85 Self-Test: Recovery Error
			2A85 Self-Test: Servo Error
			4A85 Self-Test: Command Timeout Error
			FA85 Self-Test: Unrecoverable Error
1	5D	14	Self Test GLIST Error Threshold Reached
			2A83 Self-Test: GLIST Error Count Threshold Reached
			Sense Key = Not Ready
2	04	00	Logical Unit Not Ready - Start Spindle Motor Fail
			F501 Host Interface: Logical unit not ready
2	04	01	Logical Unit Is In The Process of Becoming Ready
			F502 Host Interface: Logical unit becoming ready
2	04	02	Logical Unit Not Ready, initializing command required
			F124 Bring-up error
			F503 Host Interface: Logical unit not ready - initializing command required
2	04	03	Logical Unit Not Ready, Manual Intervention Required
			F572 Host Interface: LUN not ready; manual intervention required
2	04	04	Logical Unit Not Ready, Format In Progress
			F504 Host Interface: Not ready - format in progress
2	04	09	Not Ready - Self-test In Progress

			F505 Host Interface: Not ready - self-test in progress
2	04	0E	Not Ready - Session opened
			F508 Host Interface: Not Ready - Session opened
2	04	11	Not Ready - Notify (Enable Spin-up) Required
			F553 Host Interface: LUN Not ready, Notify (Enable Spinup) required (SAS)
2	04	1B	Host Interface Not Ready - Sanitize In Progress
			F50B Host Interface: Not Ready - Sanitize in progress
2	04	1C	Not Ready - Power Grant Required
			F556 LUN Not ready, Power Grant required (SAS)
2	04	1E	Not Ready – Microcode activation required
			F513 Host Interface: Not Ready – Microcode activation required
2	04	F0	Vendor Unique - Logical Unit Not Ready
			F133 BATS error: Vendor ID mismatch
2	31	00	Medium Format Corrupted - Reassign Failed
			F506 Host Interface: Reassign failed
2	31	01	Format Command Failed
			F507 Host Interface: Format failed
			Sense Key = Medium Error
3	03	00	Medium Error - Write Fault
			F734 Media: Unrecovered Read Write Abort Error
			F738 Media: Unrecovered Post Write Abort
			F73A Media: Unrecovered Post PES Check Write Abort Error
			F797 Media: SAT Write Abort
			F7E1 Media: Unrecovered Write Splice Error
			FEC1 Media: Unrecovered R/W Abort Due to SSW Calibration Track
			FEC3 Media: Unrecovered R/W Abort Due to RAW TID
			FEC5 Media: Unrecovered R/W Abort Due to Burst In Progress
			FEC7 Media: Unrecovered R/W Abort Due to DSW Not Settled
			FEC9 Media: Unrecovered R/W Abort Due to Preheat
			FECB Media: Unrecovered R/W Abort Due to HMA R/W Offset
			FECD Media: Unrecovered R/W Abort Due to WCSBUSY Pro Check
			FECF Media: Unrecovered R/W Abort Due to Vibration Condition (Other)
			FED1 Media: Unrecovered R/W Abort Due to Vibration Condition (Estimator)
			FED3 Media: Unrecovered R/W Abort Due to Vibration Condition (Predictor)
			FED5 Media: Unrecovered R/W Abort Due to Vibration Condition (PES Error)
			FED7 Media: Unrecovered R/W Abort Off Track Write Error
			FED9 Media: Unrecovered R/W Abort RRO Field Misread Error
			FEDB Media: Unrecovered R/W Abort RRO Field Missing Error
			FEDD Media: Unrecovered R/W Abort Idle Seek Error
			FEDF Media: Unrecovered R/W Abort Seek Timeout Error
			FEE1 Media: Unrecovered R/W Abort Estimator Error
			FEE3 Media: Unrecovered R/W Abort Predictor Error
			FEE5 Media: Unrecovered R/W Abort PES Error
			FEE7 Media: Unrecovered R/W Abort RPC Resync Error
			FEE9 Media: Unrecovered R/W Abort PES Reset Error
			FEEB Media: Unrecovered R/W Abort SID Unlock Error
			FEED Media: Unrecovered R/W Abort WCS Error
			FEEF Media: Unrecovered R/W Abort Hard Reset Error
			FEF1 Media: Unrecovered R/W Abort Shock Error
			FEF3 Media: Unrecovered R/W Abort Unlock Macro Error
			FEF5 Media: Unrecovered R/W Abort Sharp Error
			FEF7 Media: Unrecovered R/W Abort Aggressive Error
			FEF9 Media: Unrecovered R/W Abort VWI Limit Error
			FEFB Media: Unrecovered R/W Abort Gray Code Error
			FEFD Media: Unrecovered R/W Abort Linger Error
			FEFF Media: Unrecovered R/W Abort No STM Error
3	0C	FF	Unrecovered Write OCT Error

			F7A2 Media: Unrecovered Write Dcatch OCT Error
3	11	00	Unrecovered Read Error
			F67F Channel: Unrecovered Forced Channel Fault Error
			F702 Too many notches
			F719 Media: Unrecovered Sync Mark Retry Timeout
			F71F Media: Unrecovered Read Latency Error
			F727 Media: Unrecovered Internal Write Catch Error
			F72D Media: Unrecovered Uncorrectable Read Data error
			F72F Media: Unrecovered Error on Last Data Read
			F730 Media: Recommend targeted scan
			F73F Media: NFZ Table Full
			F740 Media: Defect SID Table Full Error
			F74A Media: Unrecovered Alternate Track Table Full Error
			F74D Media: Unrecovered Too Many Heads Error
			F74E Media: Unrecovered Skew Table Size Error
			F74F Media: Unrecovered Too Many Zones Error
			F750 Media: Unrecovered Too Many SIDs Error
			F751 Media: Unrecovered Alternate Track Table Full Error
			F752 Media: Unrecovered Drive Capacity Too Small
			F753 Media: Unrecovered G-list Full (Format command)
			F754 Media: Unrecovered G-list Full (2) (Format command)
			F755 Media: Unrecovered Pointer Repeat Size Error
			F756 Media: Unrecovered DST Slot Size Error
			F757 Media: Unrecovered P-list Full Error
			F758 Media: Unrecovered Invalid NFZ Table Error
			F75E Media: Unrecovered Maximum Servo Cylinder Number Too Small Error
			F76D Media: Unrecovered MEDC Uncorrectable Error
			F783 Media: Unrecovered Force Soft Error
			F785 Media: Unrecovered Channel Sector Marginal Error
			F79A Media: Unrecovered HS Measure Target Mismatch
			F7A6 Media: Unrecovered LBA ECC Last Data Read Error
			F7A7 Media: Unrecovered Committed Write Hard Error
			F7CE Media: Unrecovered Offline Already TAR Error
			F7E7 Media: Unrecovered NRZ Sector Marginal Error
3	11	14	Unrecovered LBA Error
			F7A8 Media: Unrecovered Committed Write Correction Disabled Error
			F7A9 Media: Unrecovered Committed Write Uncorrectable Error
			F7CA Media: Unrecovered LBA Correction Disabled Error
			F7CC Media: Unrecovered LBA Write Uncorrectable Error
3	15	00	Random Positioning Error
			F713 Media: Unrecovered LBA MEDC Error
			F715 Media: Unrecovered Sector Overflow Error
			F71B Media: Unrecovered Sector miss cause watchdog expire
			F73E Media: Unrecovered Sector Miss Error
			F76F Media: Uncorrectable Channel Ready Error
			F771 Media: Unrecovered SID Timeout Error
			F77A Media: BUFCNT Timeout Error
			F77D Media: Unrecovered Servo Area Timeout
			F781 Media: Unrecovered DLC SID Delay Timeout
			F7B3 Media: Unrecovered Abort Window Error
			F7EF Media: Unrecovered Sector Number Cylinder Error
3	15	03	Unrecovered Sector Error
			F7AF Media: Unrecovered Sector Missing Error
			F7B0 Media: Unrecovered Sector Overflow
3	16	00	Data Synchronization Mark Error
			F653 Channel: Unrecovered Read Gate Fault Error
			F65D Channel: Unrecovered Mode Overlap Read Fault Error

			F725 Media: Unrecovered READ Overrun Servo Gate Active
			F736 Channel: Unrecovered No Sync Detected Error
			F73C Media: Unrecovered Data Address Mark Error
			F7AB Media: Unrecovered Read Overrun Error
3	19	02	Defect List Error in Primary List
			F74B Media: Unrecovered Primary Defect List Error
3	19	03	Defect List Error in Grown List
			F74C Media: Unrecovered Grown Defect List Error
3	31	00	Medium Format Corrupted Reassign Failed
			F701 Format corrupted
			FF01 IndSys: Drive Not Loaded
			FF02 IndSys: Drive Not Loaded - Format Invalid
			FF03 IndSys: Indirection System Not Online
			FF04 IndSys: Drive Not Loaded - Old Version Mismatch
			FF05 IndSys: Drive Not Loaded - Heap Pointer Mismatch
			FF06 IndSys: Drive Not Loaded - Heap size Mismatch
			FF07 IndSys: Drive Not Loaded - Rid Heap Size Mismatch
			FF08 IndSys: Drive Not Loaded - Heap Version Mismatch
			FF09 IndSys: Drive Not Loaded - Incompatible Rid
			FF0A IndSys: Drive Not Loaded - Corrupt Rid
			FF0B IndSys: Drive Not Loaded - Rid Num Objects Mismatch
			FF0C IndSys: Drive Not Loaded - Rid Version Mismatch
			FF0D IndMgr: Drive Not Loaded - Rid Version Mismatch
			FF0E IndSys: Drive Not Loaded - Layout Rid Version Mismatch
			FF0F IndSys: Drive Not Loaded - W2C Rid Version Mismatch
			FF10 IndSys: Drive Not Loaded - Layout Manager Restore Failed
			FF11 IndSys: Drive Not Loaded - W2C Manager Restore Failed
			FF13 IndSys: Drive Not Loaded - DMM Format Failed
			FF14 IndSys: Drive Not Loaded - IM Format Failed
			FF1A IndSys: Drive Not Loaded - Metadata First Primary
			FF1B IndSys: Drive Loaded - Metadata First Primary and Secondary
			FF1C IndSys: Drive Loaded - IBA Out of Range
			FF1E IndSys: Drive Loaded - Context Sequence ID Mismatch
			FF70 NVC Not Loaded
			FF71 NVC Command Spec Too Large
			FF72 ESL Command Spec Mismatch
3	31	01	Indirection System Failure
			F761 Media: Unrecovered Wrong TDC MIN Number Sector Per Track EST
			F765 Media: Unrecovered Wrong TDC MAX Number Sector Per SID
			FF12 IndSys: Drive Not Loaded - Layout Failed
			FF15 IndSys: Drive Not Loaded - Pseudo Write Failed
			FF16 IndSys: Drive Not Loaded - Full drop Failed
			FF17 IndSys: Drive Not Loaded - EPO Format Failed
			FF18 IndSys: Drive Not Loaded - Set IM Valid Failed
			FF19 IndSys: Drive Not Loaded - Bring Online failed
			FF20 IndSys: Drive Not Loaded - EPD Flash Entry Invalid
			FF21 LayoutMgr: All Flash Entries Erased
			FF22 IndSys: Drive Loaded - Replay Failed
			FF23 Out of Order EPO SRAM Copy Object
			FF24 ShowStop During EPO
			FF25 Error While Loading Object
			FF26 Missing NVC SPEC
			FF27 Showstop during EPO replay
			FF28 IndSys: Full context drop write overflow
			FF29 IndSys: Interruptible full context drop not started
			FF2A EPD num EPO pages exceeded
			FF2B IndSys: IFCD repopulate invalid spec

			FF41 LayoutMgr: Format Capacity Not Met
			FF43 IndSys: Drive Not Loaded - Metadata ATI
			FF44 IndSys: Drive Loaded - Replay Fail
			FF45 Format Too Many Regions
			FF46 Format No Tracks in Region
			FF47 Format Not Enough Tracks For Spares
			FF48 Format Too Many Data Tracks
			FF50 IndMgr: IM Demand Split Too Deep Failure
			FF51 IndMgr: Allocate Failed Delta Group
			FF52 IndMgr: Allocate Failed Split Spec
			FF53 IndMgr: Allocate Failed Split Delta
			FF54 IndMgr: Allocate Failed Unsplit Delta Group
			FF55 IndMgr: Generic Insert Exception Failed
			FF56 IndMgr: Commit write lba out of range
			FF57 IndMgr: Format insuffient heap size
			FF60 EpoMgr: Flash Read RS Syndrome Gen Timeout
			FF61 EpoMgr: Uncorrectable Flash RS ECC Error
			FF62 EpoMgr: Correctable EPO Timeout
			FF63 EpoMgr: ARM FPS Engine and Not Spinning
			FF66 EpoMgr: Flash Header Not Pre Erased
			FF67 EpoMgr: Flash Data Not Pre Erased
			FF68 EpoMgr: Flash Header Not Written
3	31	03	Sanitize Command failed
			F50C Host Interface: Sanitize Command failed
3	40	00	Unrecovered SAT No Buffer Overflow Error
			F720 Media: RC Dump Overflow Error
			F721 Media: Format Configuration Invalid
			F75F Media: Unrecovered SAT No Buffer Overflow Error
3	40	01	Unrecovered SAT Buffer Overflow Error
			F760 Media: Unrecovered SAT Buffer Overflow Error
3	40	02	Unrecovered SAT No Buffer Overflow With ECS Fault
			F78E Media: Unrecovered SAT No Buffer Overflow With ECS Fault
3	40	03	Unrecovered SAT Buffer Overflow With ECS Fault
			F78F Media: Unrecovered SAT Buffer Overflow With ECS Fault
3	40	FF	No Buffer Overflow Reset Error
			F790 Media: Unrecovered SAT No Buffer Overflow Reset Media
			F791 Media: Unrecovered SAT No Buffer Overflow Reset with ECS Fault
3	5D	01	Self Test Unrecoverable Error Threshold Exceeded
			FA81 Self-Test: Unrecoverable Error Count Threshold Exceeded
3	81	00	Vendor Unique - Internal Logic Error
			F75B Media: Unrecovered Too Many Sectors Error
			Sense Key = Hardware Error
4	02	00	No Seek Complete
			F41C Servo: Unrecovered Current error
			F41E Servo: Unrecovered Seek timeout
			F420 Servo: Unrecovered Seek error
			F42C Servo: Unrecovered RRO Calibration timeout
			F4A1 Servo: Unrecovered IDLEA Grab Error
			F4A3 Servo: Unrecovered IDLEA Seek Error
			F4A5 Servo: Unrecovered AVEDAC Error
			F4A7 Servo: Unrecovered IDLEA Exit Timeout Error
			F4A9 Servo: Unrecovered IDLEA Long Seek Error
			F4AB Servo: Unrecovered IDLEA SID ACQ Error
			F4CC Servo: Unrecovered IDLEA Check CMPLT Error
4	09	00	Track Following Error
			F422 Servo: Unrecovered Track following error
			F424 Servo: Unrecovered Track follow timeout

4	31	00	Medium Format Corrupted - Reassign Failed
			F204 Reassign reserved area media error
4	32	00	No Defect Spare Location Available
			F205 G-list full - can't reassign any more sectors
			F206 No spares available
4	3E	03	Self-test Failed
			F481 Servo: Unrecovered Self-Test Failed
			F75D Media: Unrecovered Self-Test Failed Error
			FA8D SMART: Disk shift exceeded threshold
4	3E	04	Unrecovered Self-Test Hard-Cache Test Fail
			F762 Media: Unrecovered Self-Test Hard-Cache Test Fail
4	3E	05	Unrecovered Self-Test OTF-Cache Fail
			F763 Media: Unrecovered Self-Test OTF-Cache Fail
4	40	80	Diagnostic Failure
			F101 BATS error: Reserved Area - Invalid request
			F102 BATS error: Reserved Area - Broken
			F103 BATS error: Reserved Area - Invalid version
			F104 BATS error: Reserved Area - Invalid checksum
			F105 BATS error: Reserved Area - Invalid eyecatcher
			F106 BATS error: Reserved Area - Invalid main header checksum
			F107 BATS error: Reserved Area - Invalid read length
			F108 BATS error: Reserved Area - Address boundary error
			1109 BATS error: Reserved Area - Error reading first copy
			F10D BATS error: Reserved Area - Write fix hard error
			F10E BATS error: Reserved Area - EPO Flash Log
			F111 BATS error: RAM code load error
			F112 BATS error: RAM code check
			F113 BATS error: Exception in primary FW image
			F114 BATS error: Reserved Area - Invalid request
			F11D BATS error: Incorrect Disk Code
			F123 BATS error: Reserved map index too large
			F125 BATS error: Invalid RID/FID
			F12B BATS error: Reserved area - invalid model
			F12D Format Reserved: FAT Size Exceeded Error
			F12E Format Reserved: Insufficient DIRS Good Error
			F12F Format Reserved: Insufficient FATS Good Error
			F131 Flash timeout
			F137 Flash ECC error
			F139 Format Reserved: Resize RID/FID Error
			F13A Format Reserved: Too many RDEF entries
			F13C BATS error: NCDE DRAM failure
			F140 Format Reserved: Too many Defects Error
			F142 ATA Diagnostic Code: No Error
			F143 ATA Diagnostic Code: Formatter Error
			F144 ATA Diagnostic Code: Sector Buffer Error
			F147 ATA Diagnostic Code: Read/Write Test Error
			F148 BATS error: Still broken after clear
			F149 BATS#2 error: Security: AES Error
			F14A BATS#2 error: Security: RSA Error
			F14B BATS#2 error: Security: DRGB Error
			F14C BATS#2 error: Security: SHA256 Error
			F14D BATS#2 error: Security: HMAC Error
			F14E BATS#2 error: Security: Hardware AES Error
			F14F BATS#2 error: Security: Hardware SHA256 Error
4	40	81	DRAM Failure
			F12A DRAM test error
4	40	90	Diagnostic Failure

			F118 BATS#2 error: Seek test error
4	40	91	Diagnostic Failure
			F13E BATS#2 error: TCG Test Failed
			F146 BATS#2 error: EDC Encryption Test error
4	40	A0	Diagnostic Failure
			F119 BATS#2 error: Read/write test error
			F11B BATS#2 error: CRC test error
			F11C BATS#2 error: XOR test error
			F136 BATS#2 error: End-To-End Data Protection error
			F13F BATS#2 error: Read/Write Test Compare Failed
			F145 BATS#2 error: EDC Compare Test error
4	44	00	Internal Target Failure
			F11E SoC compatibility failure
			F11F HI test: No command slot available
			F121 HI test: Loopback sector compare failure
			F122 HI test: Failed to gain word sync
			F12C Host Interface Test: Port active error
			F203 Sanity: Sanity Check Failure
			F208 Mode Page Structure Mismatch
			F209 Miscompare of SBA in the P-List
			F20B DSLT: Invalid number of splits
			F20C DSLT: Invalid relaxed format
			F20D DSLT: First Fragment too large
			F20E DSLT: Invalid end offset
			F20F DSLT: Cycle not complete
			F220 MFG: Consistency Check failed
			F221 MFG: General Align Tables Missing
			F230 SEC_MGR: AES Hardware Error
			F231 SEC_MGR: BDE Unwrap Error
			F240 SEC_MGR: PRNG Seed Error
			F241 SEC_MGR: PRNG General Error
			F302 Motor: Unrecovered internal error
			F304 Motor: Unrecovered Open Loop Commutation failure
			F306 Motor: Unrecovered No feedback detected error
			F308 Motor: Unrecovered Settle timeout
			F30A Motor: Unrecovered Gross speed error
			F30C Motor: Unrecovered 12V OK error
			F30E Motor: Unrecovered Speed error
			F312 Motor: Unrecovered Internal 12V not OK timeout
			F314 Motor: Unrecovered Inductive Sense speed error
			F316 Motor: Unrecovered Spin Sense speed error
			F31A Motor: Unrecovered Target speed error
			F31C Motor: Unrecovered Power driver version error
			F31E Motor: Unrecovered Over current error
			F322 Motor: Unrecovered Negative regulator fault
			F324 Motor: Unrecovered Module overtemp error
			F326 Motor: Unrecovered 12V or 5V OK error
			F328 Motor: Unrecovered unknown error
			F366 Motor: Unrecovered Predriver Voltage Offset Calibration Error
			F368 Motor: Unrecovered Predriver BEMF Gain Calibration Error
			F36A Motor: Unrecovered Predriver BEMF Unload Calibration Error
			F370 Motor: Unrecovered IDCS Calibration Measurement 1 Error
			F372 Motor: Unrecovered IDCS Calibration Measurement 2 Error
			F374 Motor: Unrecovered IDCS Calibration Saturation Error
			F376 Motor: Unrecovered IDCS Calibration Adjustment Error
			F378 Motor: Unrecovered Predriver VDUAL over current
			F37A Motor: Unrecovered Predriver NEG Chargepump Fault

			F37C Motor: Unrecovered Predriver VGH Fault
			F37E Motor: Unrecovered Predriver Ext Interrupt
			F380 Motor: Unrecovered Predriver Ext Fault
			F382 Motor: Unrecovered PMIC Not Detected
			F384 Motor: Unrecovered Get MA Error
			F386 Motor: Unrecovered Unexpected HD on Ramp
			F388 Motor: Unrecovered VCPDSA Driver Failure
			F38A Motor: Unrecovered Motor Start Timeout
			F38C Motor: Unrecovered Motor PMIC UV12
			F38E Motor: Unrecovered Motor PMIC UV5
			F390 Motor: Unrecovered Motor PMIC UV09
			F392 Motor: Unrecovered Motor PMIC OT12
			F394 Motor: Unrecovered Motor PMIC OT5
			F396 Motor: Unrecovered Motor PMIC EOTW12
			F398 Motor: Unrecovered Motor PMIC EOTW5
			F39A Motor: Unrecovered Motor PMIC OC12
			F39C Motor: Unrecovered Motor PMIC OC5
			F39E Motor: Unrecovered Motor PMIC OC09
			F3A0 Motor: Unrecovered Motor PMIC OV12
			F3A2 Motor: Unrecovered Motor PMIC OV5
			F3A4 Motor: Unrecovered I2C READ Error
			F3A6 Motor: Unrecovered I2C WRITE Error
			F3A8 Motor: Unrecovered PMIC not supported
			F402 Servo: Unrecovered Requested rezero head does not exist
			F404 Servo: Unrecovered Back EMF movement in progress
			F406 Servo: Unrecovered Back EMF timeout error
			F408 Servo: Unrecovered ADC conversion timeout
			F40A Servo: Unrecovered Load/unload calibration error
			F40C Servo: Unrecovered Invalid 5 volts
			F40E Servo: Unrecovered Invalid 12 volts
			F410 Servo: Unrecovered Invalid harmonic requested
			F416 Servo: Unrecovered Invalid temperature
			F418 Servo: Unrecovered Truncated rezero
			F41A Servo: Unrecovered Heads not loaded
			F426 Servo: Unrecovered KT Seek out of range
			F428 Servo: Unrecovered DAC Offset calibration error
			F42A Servo: Unrecovered Load speed error
			F42E Servo: Unrecovered ADC Calibration error
			F430 Servo: Unrecovered ADC Offset error
			F432 Servo: Unrecovered ADC Limit error
			F434 Servo: Unrecovered Balancer Resistance error
			F436 Servo: Unrecovered Balancer Resistance Limit error
			F438 Servo: Unrecovered First Cylinder error
			F43A Servo: Unrecovered Valid Cylinder error
			F43C Servo: Unrecovered ADC Saturation error
			F43E Servo: Unrecovered Latch Break timeout
			F440 Servo: Unrecovered MR Resistance out of range error
			F442 Servo: Unrecovered VCM Retract error
			F444 Servo: Unrecovered Load Retry error
			F446 Servo: Unrecovered DFT Sharp error
			F448 Servo: Unrecovered Load/Unload state error
			F44A Servo: Unrecovered TFCR out-of-range error
			F44C Servo: Unrecovered Measure GMR Timeout
			F44E Servo: Unrecovered Coil Resistance Measurement Failure
			F460 Servo: Unrecovered WCS Hang Error
			F462 Servo: Unrecovered DFT Timeout Error
			F464 Servo: Unrecovered SDM Timeout Error

			F466 Servo: Unrecovered RRO Write Error
			F468 Servo: Unrecovered Velocity Error
			F46A Servo: Unrecovered Start SID Incorrect Error
			F46C Servo: Unrecovered End Sid Incorrect Error
			F46E Servo: Unrecovered Measure GMR SDM Failure
			F470 Servo: Unrecovered VCM Free Speed Error
			F472 Servo: Unrecovered Emergency Brake Timeout Error
			F474 Servo: Unrecovered Excessive Current Error
			F476 Servo: Unrecovered Excessive Velocity Error
			F477 Servo: Unrecovered Invalid SDM CDB Error
			F478 Servo: Unrecovered Invalid SDM Descriptor Error
			F479 Servo: Unrecovered Invalid DFT Descriptor Error
			F47A Servo: Unrecovered SDM or DFT Allocation Error
			F47B Servo: Unrecovered SDM OR DFT Transfer Error
			F47C Servo: Unrecovered SDM Physical Parameter Error
			F47E Servo: Unrecovered RROF SDM Timeout Error
			F480 Servo: Unrecovered RROF Over Limit Error
			F483 Servo: Unrecovered Measure Asymmetry SDM Failure
			F484 Servo: Unrecovered Measure Overwrite SDM Failure
			F485 Servo: Unrecovered TFC Utility SDM Failure
			F487 Servo: Unrecovered Milli-Calibration Error
			F488 Servo: Unrecovered SIDSAT Timeout Error
			F489 Servo: Unrecovered SDM Load-And-Drop-Anchor Error
			F48A Servo: Unrecovered Filter Table Full Error
			F48B Servo: Unrecovered Filter Table Invalid Error
			F48D Servo: Unrecovered Measure Qsamp SDM Failure
			F48F Servo: Unrecovered Tilt Calibration Error
			F491 Servo: Unrecovered Tilt Numerical Error
			F492 Servo: Unrecovered Milli Table Load Error
			F493 Servo: Unrecovered TFCR DAC Out of Range
			F494 Servo: Unrecovered MRR DAC Out of Range
			F495 Servo: Unrecovered TFCR Open/Short
			F497 Servo: Unrecovered DTID Inhibit Error
			F499 Servo: Unrecovered Waketime Error
			F49B Servo: Unrecovered SHARP Pulse TFC Entry Error
			F49D Servo: Unrecovered Heads Not Loaded FFSULI
			F49F Servo: Unrecovered Load Abort FFSULI
			F4AD Servo: Unrecovered ODCS Detect Error
			F4AF Servo: Unrecovered Unexpected Motion Error
			F4B1 Servo: Unrecovered BEMF Loop error
			F4B3 Servo: Unrecovered BEMF DTID Error
			F4B5 Servo: Unrecovered BEMF Lock Error
			F4B7 Servo: Unrecovered BEMF Fail Error
			F4B9 Servo: Unrecovered BEMF Speed Error
			F4BB Servo: Unrecovered Measure GTM SDM Failure
			F4BD Servo: Unrecovered SAM2SG SDM Failure
			F4BF Servo: Unrecovered Invalid MULTRG Descriptor Error
			F4C1 Servo: Unrecovered Filter COEF Overflow
			F4C3 Servo: Unrecovered WCS Watchdog Expire
			F4C4 Servo: Unrecovered DFTSQZ Timeout Error
			F4C6 Servo: Unrecovered Measure HS SDM Failure
			F4C8 Servo: Unrecovered HD on RAMP SWCAL Unload
			F4CA Servo: Unrecovered HD on RAMP SWCAL IDsearch
			F4CE Servo: Unrecovered IDLEA Time Base Duration
			F4D0 Servo: Unrecovered Emergency Brake Duration
			F4D2 Servo: Unrecovered VCM Free Duration
			F4D6 Servo: Unrecovered Search Mode Duration

			F4D8 Servo: Unrecovered Invalid Seek Target
			F4DA Servo: Unrecovered safe zone seek error
			F4DC Servo: Unrecovered head switch at safe zone fail
			F4DE Servo: Seek Length histogram bin order error
			F603 AE: Unrecovered IVC fault error
			F604 Channel/AE: Unrecovered Internal Calibration Error
			F605 Channel/AE: Unrecovered Internal MR Calibration Error
			F607 Channel/AE: Unrecovered data with PPM or precomp load
			F60A AE: TFC Short Error
			F60C AE: Unrecovered Shorted MR Element Error
			F60D Unsupported Read Channel Command Error
			F60E Init: RRClk Dead Error
			F60F Init: RRClk Unlock Error
			F611 AE: Unrecovered ECS Shorted Fault
			F613 AE: Unrecovered ECS Open Fault
			F615 AE: Unrecovered ECS Fault
			F617 Channel: Unrecovered Channel Error
			F619 Init: SVCLK Unlock Error
			F61B AE: Unrecovered Open MR Element Error
			F61D AE: Unrecovered IC Over Temperature Error
			F61F AE: Unrecovered IP Clock Count Error
			F621 AE: Unrecovered DLC SVCLK Error
			F623 AE: Unrecovered Write Data BLS Error
			F625 AE: Unrecovered ECSR Dac Out of Range
			F627 AE: Unrecovered Power Supply Error
			F629 AE: Unrecovered Open Write Head Error
			F62B AE: Unrecovered Write Transition Error
			F62C AE: Unrecovered I2C Command Error
			F62D AE: Unrecovered I2C Memory Read Error
			F631 AE: Unrecovered SPE Low In Write Fault
			F633 Channel: Unrecovered Write Synth Unlock error
			F635 Unrecovered CH WPTP Timeout
			F637 AE: Unrecovered Short Write Head Error
			F638 AE: Unrecovered I2C 5V Register Data Error
			F639 AE: Unrecovered I2C 12V Register Data Error
			F63A AE: Unrecovered I2C Memory Checksum Error
			F63D AE: Unrecovered TFC Open Error
			F640 AE: Unrecovered DCR Location Error
			F641 AE: Unrecovered AE Burst overlapped Error
			F642 AE: Unrecovered Software Readback Error
			F643 AE: Unrecovered Readback Error
			F645 AE: Unrecovered Latch Fault Error
			F647 AE: Unrecovered CHN Power Sequence Error
			F649 Channel: Unrecovered Reset Flag Error
			F64B Channel: Unrecovered Gate Command Queue Underflow Error
			F64D Channel: Unrecovered Sector Size Fault Error
			F64F Channel: Unrecovered Last Split Fault Error
			F651 Channel: Unrecovered Servo-Servo Overlap Error
			F655 Channel: Unrecovered RWBI Out Fault Error
			F657 Channel: Unrecovered No Write Clock Error
			F659 Channel: Unrecovered No NRZ Clock Error
			F65B Channel: Unrecovered Calibration Block Fault Error
			F65F Channel: Unrecovered Gate Command Queue OverflowError
			F661 Channel: Unrecovered Ending Write Splice Fault Error
			F663 Channel: Unrecovered Write Gate Overlap Fault Error
			F665 Channel: Unrecovered Write Gate Fault Error
			F667 Channel: Unrecovered Buffer Overflow Write Error

			F669 Channel: Unrecovered Buffer Underflow Write Error
			F66B Channel: Unrecovered Write Parity Error
			F66D Channel: Unrecovered Buffer Overflow Read Error
			F66F Channel: Unrecovered CTG Wedge Slip Fault Read Error
			F671 Channel: Unrecovered CTG Packet Late Fault Error
			F673 Channel: Unrecovered Baseline Instability Count Late Error
			F675 Channel: Unrecovered Preamp Count Fault Error
			F677 Channel: Unrecovered Pfault Read Error
			F679 Channel: Unrecovered Pfault Write Error
			F67B Channel: Unrecovered Last Data Fault Error
			F67D Channel: Unrecovered WRPO Fault Error
			F681 Channel: Unrecovered PLLFloor Error
			F683 Channel: Unrecovered Loss lock Error
			F685 Channel: Unrecovered VGA Floor Error
			F687 Channel: Unrecovered Buffer EVGA Floor Error
			F689 Channel: Unrecovered TA Detector Error
			F68B Channel: Unrecovered NPLD Error
			F68D Channel: Unrecovered ZGR Flag Error
			F68F Channel: Recovered DPLL Freq Flag Error
			F691 Channel: Unrecovered Massive Drop Out Detection Error
			F693 Channel: Unrecovered CTG Parameter Out of Bounds Flag Error
			F695 Channel: Unrecovered Flaw Signal Sync Error
			F697 Channel: Unrecovered ACQ Flag Error
			F699 Channel: Unrecovered No Clock Error
			F69B Channel: Unrecovered PLL Loss lock Error
			F69D Channel: Unrecovered ESNR Timeout Error
			F69F Channel: Unrecovered ADC Sample Not Ready Error
			F6A0 AE: Unrecovered Fuse Load Fail Error
			F6A1 AE: Unrecovered Configuration Error
			F6A3 Channel: Unrecovered Auto RST NRZ-Clock Error
			F6A5 Channel: Unrecovered Write CRC Fault Error
			F6A7 Channel: Unrecovered Read Synthesizer Loss of Lock Error
			F6A9 Channel: Unrecovered RLL Parameter Error
			F6AB Channel: Unrecovered FIFO Underflow Error
			F6AD Channel: Unrecovered FIFO Overflow Error
			F6AF Channel: Unrecovered Iterative Decoder Error
			F6B1 Channel: Unrecovered Iterative Read Error
			F6B3 Channel: Unrecovered Encoder Overflow Error
			F6B5 Channel: Unrecovered Encoder Underflow Error
			F6B7 Channel: Unrecovered Encoder RAM CRC Error
			F6B9 Channel: Unrecovered Interface Fault
			F6BB Channel: Unrecovered QMM EVDump Parse Error
			F6BD Channel: Unrecovered DiBit Timeout Error
			F6BF Channel: Unrecovered MXP Write Fault
			F6C1 Channel: Unrecovered Data Jam Error
			F6C3 Channel: Unrecovered Code-Word Out Of Order Error
			F6C5 Channel: Unrecovered Read RLL Buffer CRC Flag Error
			F6C7 Channel: Unrecovered Write RLL Buffer CRC Flag Error
			F6C9 Channel: Unrecovered CTG No SAM Detected Fault Error
			F6CB Channel: Unrecovered ITI Adjust Preload Fault Track Error
			F6CD Channel: Unrecovered WTG SRV Fault Error
			F6CF Channel: Unrecovered CTG Engine Not Ready Fault Error
			F6D1 Channel: Unrecovered LLI Abort Fault Error
			F6D3 Channel: Unrecovered Retry Fault Error
			F6D5 Channel: Unrecovered WTG Timeout Fault Error
			F6D7 Channel: Unrecovered ITI Fault TS Transfer All Error
			F6D9 Channel: Unrecovered ITI Data Fault Error

			F6DA Channel: Unrecovered Insufficient TFC Preheat Error
			F6DB Channel: Unrecovered AE And FAEP Do Not Match
			F6DD Channel: Unrecovered Data Jam Fault Error
			F6DF Channel: Unrecovered Code-Word Out of Order Error
			F6E1 Channel: Unrecovered RLL Initialization Timeout Error
			F6E2 Channel: Unrecovered AEQ Timeout Error
			F6E3 Channel: Unrecovered AEQ NLD Initialization Error
			F6E5 Channel: Unrecovered DLC out of criteria
			F6E8 Channel: Unrecovered Mode Overlap Write Error
			F6EA Channel: Unrecovered Ready Fault Error
			F6EC Channel: Unrecovered Synchronous Abort Done Error
			F6EE Channel: Unrecovered NRZ Clear Fault Error
			F6F0 Channel: Unrecovered Collision Fault Error
			F6F2 Channel: Unrecovered Read Synthesizer Precharge Fail Fault Error
			F6F4 Channel: Unrecovered Servo Synthesizer Precharge Fail Fault Error
			F6F6 Channel: Unrecovered Read Synthesizer Loss of Lock Error
			F6F8 Channel: Unrecovered Fragment Number Fault Error
			F6FA Channel: Unrecovered Preamble Quality Monitor Fault Error
			F6FC Channel: Unrecovered RTM Configuration Error
			F6FD Channel: Unrecovered RTM Failure Error
			F6FE Channel: Unrecovered RTM Timeout Error
			F717 Media: Unrecovered Write Overrun Error
			F71D Media: Unrecovered DRAM CRC Error
			F723 Media: Unrecovered WRITE Overrun Servo Gate Active
			F729 Media: Unrecovered S2S MAX Flag Fault
			F732 Media: Unrecovered Write Fault
			F745 Media: Unrecovered Sudden Stop Error
			F75A Media: Unrecovered Unknown Error
			F764 Media: Unrecovered Merge G-List Failed - No P-List Exists
			F76B Media: Unrecovered No NRZ Clock Error
			F787 Media: Unrecovered LLI Underrun Error
			F78D Media: Unrecovered FFSULI Timeout
			F793 Media: Unrecovered MEDC Write Data Not Ready error
			F795 Media: Unrecovered DMA Timeout Error
			F799 Media: Unrecovered ID Not Found Error
			F79B Media: Unrecovered Hard Clock Stop until the RDWTCLK is running again
			F79D Media: Unrecovered Channel Read Timeout Error
			F79F Media: Unrecovered End Sector PHSN Error on READ
			F7B5 Media: Unrecovered Shock Sensor Error
			F7C1 Media: Unrecovered End Sector Check Error
			F7C3 Media: Unrecovered Read CRC Error
			F7C5 Media: Unrecovered DRAM ECC Error
			F7C7 Media: Unrecovered DRAM ECC LBA Error
			F7C9 Media: Unrecovered End Sector PHSN Error on WRITE
			F7CD Media: Unrecovered LBA Encryption Error
			F7D2 Media: Unrecovered DCHW Hang
			F7D3 Media: Unrecovered SG Drive Error
			F7D5 Media: Unrecovered Parity PTR FIFO Error
			F7D7 Media: Unrecovered Parity LBA FIFO Error
			F7D9 Media: Unrecovered Parity Uncorrectable FIFO Error
			F7DB Media: Unrecovered Status Uncorrectable FIFO Error
			F7DD Media: Unrecovered Parity EDC SRAM Error
			F7DF Media: Unrecovered REQ/ACK Handshake Error
			F7E3 Media: Unrecovered Read Parity Error
			F7E5 Media: Unrecovered EPO Error
			F7E9 Media: Unrecovered AE Access Inhibit Error
			F7EB Media: Unrecovered PTR FIFO Error

			F7ED Media: Unrecovered LBA FIFO Error
			F7F1 Media: Unrecovered Read Transfer Length Error
			F7F3 Media: Unrecovered DS RDC Burst Error
			F7F5 Media: Unrecovered SV RDC Burst Error
			F7F7 Media: Unrecovered Channel AE WG Error
			F7F9 Media: Unrecovered Dummy Error ERP MEAS
			F83B CMD: Unable Rebuild Assist
			F874 CMD: Unrecovered helium leak write abort
			FCxx Media: Unrecovered Unable to Read RID or FID Number xx
4	44	0B	Vendor Unique - Internal Target Failure
			F310 Motor: Unrecovered Spindle Current error
			F318 Motor: Unrecovered Spin Sense timeout
			F320 Motor: Unrecovered System clock watchdog error
			F32A Motor: Unrecovered VCM DAC watchdog error
			F32C Motor: Unrecovered Module mid-die overtemp fault
			F32E Motor: Unrecovered Module Vcmp hi-side overtemp fault
			F330 Motor: Recovered Module Vcmn hi-side overtemp fault
			F332 Motor: Unrecovered Invalid standby RPM request
			F334 Motor: Unrecovered Invalid spin state request
			F336 Motor: Unrecovered Hardware retract timeout
			F338 Motor: Unrecovered thermal limit exceeded
			F33A Motor: Unrecovered Predriver fault
			F33C Motor: Unrecovered Predriver Watchdog Fsys error
			F33E Motor: Unrecovered Predriver Watchdog DAC error
			F340 Motor: Unrecovered Predriver Speed Low error
			F342 Motor: Unrecovered Predriver UV Vboost error
			F344 Motor: Unrecovered Predriver NREG UV error
			F346 Motor: Unrecovered Predriver Ext NPOR error
			F348 Motor: Unrecovered Predriver Reg UV error
			F34A Motor: Unrecovered Predriver Under Voltage 12 Volt Supply error
			F34C Motor: Unrecovered Predriver Under Voltage 5 Volt Supply error
			F34E Motor: Unrecovered Predriver Over Voltage 12 Volt Supply error
			F350 Motor: Unrecovered Predriver Under Voltage 1.8 Volt Supply error
			F352 Motor: Unrecovered Predriver Under Voltage 0.9 Volt Supply error
			F354 Motor: Unrecovered Predriver Under Voltage 1.5 Volt Supply error
			F356 Motor: Unrecovered Predriver Shock Detected error
			F358 Motor: Unrecovered Predriver Over Temperature error
			F35A Motor: Unrecovered Predriver Under Voltage 3.3 Volt Supply error
			F35C Motor: Unrecovered Predriver Under Voltage 5 and 12 Volt Supply error
			F35E Motor: Unrecovered Predriver Error in Enabling Power Saving Mode
			F360 Motor: Unrecovered Predriver Fault in Auto Retract
			F362 Motor: Unrecovered Predriver Error in Utilizing External Power Supply
			F364 Motor: Unrecovered Predriver Regulator Supply Fault
			F36C Motor: Unrecovered Predriver VCM Short Error
			F36E Motor: Unrecovered Predriver NREG disable error
4	44	F2	Vendor Unique - Internal Target Failure
			F134 Head Health Check data compare error
4	44	F6	Vendor Unique - Internal Target Failure
			F135 Head Health Check unrecovered media error
			F141 BATS#2 error Read/Write Test Compare Failed
4	44	F9	Vendor Unique - Internal Target Failure
			F414 Servo: Unrecovered Sharp DRAM Parity Rate error
			F452 Servo: Unrecovered SHARP Parity Rate Error
			F456 Servo: Unrecovered SHARP Decode Rate Error
			F45A Servo: Unrecovered SHARP Timeout Rate Error
			F45E Servo: Unrecovered SHART Other Rate Error
4	44	FA	Vendor Unique - Internal Target Failure

			F412 Servo: Unrecovered Sharp DRAM Parity error
			F450 Servo: Unrecovered SHARP Parity Error
			F454 Servo: Unrecovered SHARP Decode Error
			F458 Servo: Unrecovered SHARP Timeout Error
			F45C Servo: Unrecovered SHARP Other Error
4	45	00	Helium leak alert
			F817 CMD: Ontime Helium leak aleart
4	85	00	Vendor Unique - Internal Key Seed Error
			1768 Media: Recovered Key Seed ID Mismatch Error
			F769 Media: Unrecovered Key Seed ID Mismatch Error
			Sense Key = Illegal Request
5	00	16	Operation in Progress
			F81F CMD: Operation in Progress
5	15	00	PHY Test In Progress Error
			F50D Host Interface: Phy Test Function in Progress
5	1A	00	Parameter List Length Error
			F820 CMD: Unrecovered Parameter List Length Error
5	20	00	Invalid Command Operation Code
			F81E CMD: Reassign Not Allowed
			F821 CMD: Unrecovered Invalid Opcode in CDB Error
5	20	02	Drive locked
			F878 CMD: Unrecovered drive locked
5	21	00	Logical Block Address out of Range
			F822 CMD: Unrecovered LBA Out Of Range Error
5	24	00	Invalid Field in CDB
			F816 CMD: Incompatible PRDS Version
			F819 CMD: Unaligned Command Error
			F823 CMD: Unrecovered Invalid Field In CDB Error
			F83F CMD: NCQ Priority Error
5	25	00	Logical Unit Not Supported
			F824 CMD: Unrecovered Invalid LUN Error
5	26	00	Invalid Field in Parameter List
			F579 Host Interface: Data Checksum Error
			F825 CMD: Unrecovered Invalid Field In Parameter List Error
			F826 CMD: Unrecovered Unsupported Log Page Error
			F829 CMD: Invalid Tx Setting for Combo Chip Error
5	26	01	Command Param Not Support
			F81A CMD: Param Not Support
5	26	02	Parameter Value Invalid
			F120 BATS error: Code Compatibility Failure
			F126 BATS error: Code checksum error
			F127 BATS error: Invalid header
			F130 BATS error: Incorrect Customer Code
			F13D BATS error: Invalid Code Signature
			F830 CMD: Unrecovered Sequence Error
5	26	04	Invalid Release of Active Persistent Reservation
			F828 CMD: Unrecovered Invalid Release of Persistent Reservation Error
5	26	06	Command Too Many Target Descriptors
			F81B CMD: Too Many Target Descriptors
5	26	07	Command Unsupported TARG DESC Type Code
			F81C CMD: Unsupported TARG DESC Type Code
5	26	08	Command Too Many Segment Descriptors
			F81D CMD: Too Many Segment Descriptors
5	26	53	CMD: Invalid Programmable Inquiry template size for EMC
			F83C CMD: CMD: Invalid Programmable Inquiry template size for EMC
5	2A	03	Reservation Conflict
			F536 Host Interface: Reservation conflict

5	2C	00	Illegal Request Sequence Error
			F511 Host Interface: Illegal Request Sequence Error
5	49	00	Invalid Message Error
			F512 Host Interface: Invalid Message
5	55	04	Insufficient Registration Resources
			F567 Host Interface: Insufficient registration resources
			Sense Key = Unit Attention
6	28	00	Not Ready To Ready Transition (Format completed)
			F514 Host Interface: Not ready to ready transition
6	29	01	Unit Attention - POR Occurred
			F516 Host Interface: Power on reset
6	29	02	Unit Attention - SCSI Bus Reset Occurred
			F517 Host Interface: SAS Hard Reset (SAS)
6	29	03	Unit Attention - Bus Device Reset Occurred
			F518 Host Interface: LUN Reset (SAS)
6	29	04	Unit Attention - Self Initiated Reset Occurred
			F519 Host Interface: Self initiated reset
6	29	07	I_T Nexus Loss Occurred
			F554 Host Interface: I_T_Nexus Loss Occurred (SAS)
6	2A	01	Mode Parameters Changed
			F51C Host Interface: Mode parameters changed
6	2A	02	Log Parameters Changed
			F51D Host Interface: Log parameters changed
6	2A	03	Reservations Preempted
			F51E Host Interface: Reservations pre-empted
6	2A	04	Reservations Released
			F51F Host Interface: Reservations released
6	2A	05	Registrations Released
			F520 Host Interface: Registrations pre-empted
6	2A	09	Capacity Data Changed
			F524 Host Interface: Capacity Data Changed
6	2A	10	Timestamp Changed
			F525 Host Interface: Timestamp Changed
6	2F	00	Commands Cleared by Another Initiator
			F521 Host Interface: Commands cleared by another initiator
6	2F	01	Commands Cleared by Power Loss Notification
			F573 Host Interface: Commands cleared due to power failure event (SAS)
6	3F	01	Microcode has been changed
			F522 Host Interface: Microcode changed
6	3F	02	Primary FW image is degraded - booting from secondary
			F526 Primary FW image is degraded - booting from secondary
6	3F	05	Device Identifier Changed
			F537 Host Interface: Device identifier changed
			Sense Key = Access Denied
7	20	02	Access Denied
			F509 Host Interface: In Self-Test - Band locked
			F827 CMD: Unrecovered Access Denied Error
7	27	08	Zone is read only
			F876 CMD: Unrecovered zone is read only
7	2C	0E	Zone is offline
			F877 CMD: Unrecovered zone is offline
			Sense Key = Aborted Command
B	0C	0E	Media Multiple WRITE Error
			F7BE Media: Multiple WRITE Error
B	0E	01	Information Unit Too Short
			F561 Host Interface: Information unit too short (SAS)
B	0E	02	Information Unit Too Long

			F562 Host Interface: Information unit too long (SAS)
B	10	00	Aborted Command - T10 Error
			F7BC Media: Unrecovered T10 error
B	10	01	Aborted Command - End-to-End Guard Check
			F568 Host Interface: End-to-End Data Protection Guard check
			F7BD Media: Unrecovered Guard Check Error
B	10	02	Aborted Command - End-to-End Application Tag Check
			F569 Host Interface: End-to-End Data Protection Application Tag check
			F7BB Media: Unrecovered Application Tag Error
B	10	03	Aborted Command - End-to-End Reference Tag Check
			F56A Host Interface: End-to-End Data Protection Reference Tag check
			F7B9 Media: Unrecovered Reference Tag error
B	11	03	Aborted Command - OCT Timeout In Recovery
			F7BF Media: Multiple READ Error
B	3F	0F	Aborted Command - Echo Buffer Overwritten
			F544 Host Interface: Echo buffer overwritten
B	44	00	Internal Target Failure
			F250 WRITE Uncorrectable Flagged Limit
			F52D Host Interface: Buffer CRC error on read
			F52E Host Interface: Internal target failure
			F54A Host Interface: Xfer Ready credit exceeded
			F54B Host Interface: Transfer length error
			F56B Host Interface: ECC error in DRAM customer data area
			F56C Host Interface: Uncorrectable DRAM ECC error
			F570 Host Interface: Host interface Synchronous CRC error
			F57A Host Interface: Synchronous CRC Error on Write
			F57B Host Interface: Synchronous CRC LBA Error
			F62F Channel: Unrecovered Channel NRZ Clear Timeout Error
			F741 Media: OCT Timeout Not Dispatched
			F742 Media: OCT Timeout In Recovery
			F743 Media: OCT Timeout Executing
			F75C Media: Unrecovered Internal Media Access Timeout Error
			F772 Media: Unrecovered DASH starting timeout
			F773 Media: Unrecovered ID table timeout
			F774 Media: Unrecovered Servo timeout
			F775 Media: Unrecovered Buffers timeout
			F776 Media: Unrecovered DASH done timeout
			F777 Media: Unrecovered DASH unknown timeout
			F778 Media: DINIT2 timeout
			F779 Media: Unrecovered Mini Mode Timeout
			F77B Media: Unrecovered Abort EOS fail
			F77E Media: Write Error Recovery Timeout
			F77F Media: Read Error Recovery Timeout
			F7D0 Media: Unrecovered Pre-load Timeout Error
			F813 CMD: Insufficient Buffer Space Error
			F815 CMD: Aborted From Internal TMF Error
			F83D CMD: Quiesce not allowed
B	47	01	Data Phase CRC Error
			F54E Host Interface: Data Phase CRC Error
B	4B	00	Data Phase Error
			F53E Host Interface: Data phase error
B	4B	02	Too Much Write Data
			F560 Host Interface: Too much write data (SAS)
B	4B	03	ACK/NAK Timeout
			F551 Host Interface: ACK NAK Timeout (SAS)
			F57D Host Interface: Break Received (SAS only)
B	4B	04	NAK Received

			F550 Host Interface: NAK rcvd (SAS)
B	4B	05	Data Offset Error
			F552 Host Interface: Bad parameter offset (SAS)
B	4B	06	Initiator Response Timeout
			F555 Host Interface: Initiator Response Timeout (SAS)
B	4B	FF	Internal Host forced
			F510 Host Interface: Host Interface Error forced
B	4E	00	Overlapped Commands Attempted
			F534 Host Interface: Overlapped command attempted
B	4F	00	Command Aborted Due To OOB
			F53F Host Interface: Abort by OOB (SAS)
B	55	00	Failed to reserve MFG slots
			F222 Failed to reserve MFG slots
			Sense Key = Miscompare
E	1D	00	Miscompare During Verify Operation
			F535 Host Interface: Miscompare during verify

12.2.9 FRU: Field Replaceable Unit (Byte 14)

The FRU (Field Replaceable Unit) field value will always be zero.

Note: The FRU field may be used to store vendor specific information in certain firmware builds.

12.2.10 Sense Key Specific (Byte 15 through 17)

The definition of this field is determined by the value of the sense key field.

12.2.10.1 Sense Key Specific - Illegal Request (Sense Key = 5h)

Error field pointer is returned.

Table 348 Field Pointer Bytes

Byte	Bit							
	7	6	5	4	3	2	1	0
15	SKSV	C/D	Reserved		BPV	Bit Pointer		
16-17	(MSB) Field Pointer (LSB)							

SKSV Sense-key specific valid
- **0** Sense-key specific field is not valid.
- **1** Sense-key specific field is valid.

C/D Command/Data
- **0** Indicates that the illegal parameter was in the data parameters sent by the initiator during DATA OUT phase
- **1** Indicates that the illegal parameter was in the command descriptor block.

BPV Bit Pointer Valid
- **0** Bit pointer field is not valid.
- **1** Bit pointer field is significant.

Bit Pointer Indicates which bit of the byte number reported in Field Pointer is the bit in error. When a multiple bit field is in error, the pointer points to the most significant bit of the field.

Field Pointer Indicates which bytes of the command descriptor block or of the parameter data were in error. Bytes are numbered starting from zero, as shown in the tables describing the commands and parameters. When a multiple byte field id is in error, the pointer points to the most significant byte

of that field.

12.2.10.2 Sense Key Specific -Recovered (Sense Key = 1h) or Medium (Sense Key = 3h) or Hardware (Sense Key = 4h)

Hardware (Sense Key = 4h) or Medium Error (Sense Key = 3h)
Actual Retry Count is reported.

Table 349 Actual Retry Count

Byte	Bit							
	7	6	5	4	3	2	1	0
15	SKSV	Reserved						
16	Secondary Step				ERP Type			
17	Actual Retry Count							

SKSV Sense-key specific valid
- **0** Actual Retry Count is not valid.
- **1** Actual Retry Count is valid.

Actual Retry Count Number of retry steps used in attempting to recover from the error condition.

Secondary Step Secondary error recovery step (valid for servo errors only).

ERP Type Error recovery table branch for this error. Valid values are shown in the table below.

Table 350 Recovery Type

Recovery Type	ERP Type
Read	0x00
Verify	0x01
Write	0x02
Seek	0x03
Read, Sync Byte branch	0x04
Read, Thermal Asperity branch	0x05
Read, Minus Mod branch	0x06
Verify, Sync Byte branch	0x07
Verify, Thermal Asperity branch	0x08
Verify, Minus Mod branch	0x09

12.2.10.3 Not Ready (Sense key = 2h)

These fields are defined for the Format unit (04h) command with the immediate bit set to one and the Send Diagnostic (1Dh) command with Background self-test function.

Progress indication is returned.

Table 351 Progress Indication

Byte	Bit							
	7	6	5	4	3	2	1	0
15	SKSV	Reserved						
16-17	(MSB) Progress Indication (LSB)							

SKSV Sense-key specific valid
- **0** Progress Indication is not valid.
- **1** Progress Indication is valid.

Progress Indication Indicates a percent complete in which the returned value is the numerator that has 10000h as its denominator.

12.2.11 Reserved (Byte 18 through 19)

Reserved fields are filled with zero.

12.2.12 Vendor unique error information (Byte 20 through 23)

This field gives detailed information about the error. It contains a unique code which describes where the error was detected and which piece of hardware or microcode detected the error depending on current operation.

12.2.13 Physical Error Record (Product Specific Information) (Byte 24 thru 29)

- ILI = 1 - This field contains zeros.
- ILI = 0 - These bytes contain the physical location of the error in cylinder, head, and sector. Bytes 24, 25, and 26 are cylinder high, middle and low bytes respectively, of the cylinder number. Byte 27 is the head number. Bytes 28 and 29 are the high and low bytes, respectively of the sector number.

If the head is undetermined, bytes 24, 25, and 26 are set to 0FFFFFFh. If the head number is undetermined, byte 27 is set to 0FFh. If cylinder, head, and sector have no relevance the error, bytes 24 through 29 will all be set to 0FFFFFFFFFFFFh for Valid = 0 and ILI = 0. This Physical Error Record field is valid for Sense Key 1, 3, and 4 only.

Table 352 Log Only Errors

Valid	ILI	Description
1	0	Cylinder Number (bytes 24-26) Head number (byte 27) Sector Number (bytes 28-29)
1	1	0x000000000000
0	x	0x000000000000 - (not used/invalid)

12.3 Descriptor Format Sense Data

The descriptor format sense data for response codes 72h (current errors) and 73h (deferred errors) is defined below.

Table 353 Descriptor Format Sense Data

Byte	Bit							
	7	6	5	4	3	2	1	0
0	Reserved=0	Response Code (72h or 73h)						
1	Reserved			Sense Key				
2	Additional Sense Code							
3	Additional Sense Code Qualifier							
4-6	Reserved							
7	Additional Sense Length (n-7)							
8-m	Sense Data Descriptor # 1							
m...x	…….							
x -n	Sense Data Descriptor # K							

Response Code: 72h Current Error. See section 12.1.3 “Sense Data Response Code” for more details.

73h Deferred Error. See section 12.1.3 “Sense Data Response Code” for more details.

The Sense Key definitions is the same as fixed format sense data.

The Additional Sense Code/Qualifier definitions is the same as fixed format sense data.

The Value of the Additional Sense Length indicates the remaining number of bytes in the sense data
Sense data descriptors (Byte 8 through n) provide specific sense information. The general format of a sense data descriptor is shown below:

Table 354 Sense Data Descriptor Format

Byte	Bit							
	7	6	5	4	3	2	1	0
0	Descriptor Type							
1	Additional Length (n-1)							
2-n	Sense Data Descriptor Specific							

The Descriptor Type identifies the type of a sense data descriptor. (Supported types are listed below)

Table 355 Supported Descriptor Types

Type Code	Description
00h	Information Sense Data Descriptor
01h	Command-specific Sense Data Descriptor
02h	Sense Key Specific Sense Data Descriptor
03h	Field Replaceable Unit Sense Descriptor
05h	Block Command Sense Data Descriptor
80h	Vendor Unique Unit Error Code Sense Data Descriptor
81h	Vendor Unique Physical Error Record Sense Data Descriptor

The ADDITIONAL LENGTH field indicates the number of sense data descriptor specific bytes that follow in the sense data descriptor.

12.3.1 Order of Sense Descriptors

The drive may return up to 7 sense data descriptors in byte 8 through byte 59 of the sense data, up to the number of sense data bytes allowed (see Table 356). The sense descriptors returned will always be in the order shown in the table below, regardless of whether a descriptor contains valid information or not.

Table 356 Sense Data Descriptor List

Byte	Bit							
	7	6	5	4	3	2	1	0
0-7	Common Headers							
8-19	Information Sense Data Descriptor							
20-31	Command-specific Sense Data Descriptor							
32-39	Sense Key Specific Sense Data Descriptor							
40-43	Field Replaceable Unit (FRU) Sense Data Descriptor							
44-47	Block Command Sense Data Descriptor							
48-51	Vendor Unique Unit Error Code Sense Data Descriptor							
51-59	Vendor Unique Physical Error Record Sense Data Descriptor							

12.3.2 Sense Data Descriptor Definitions

12.3.2.1 Information Sense Data Descriptor (Byte 8 - 19)

The Information Sense Data Descriptor is stored in bytes 8 through 19 of the descriptor format sense data. Format of the Information Sense Data Descriptor is shown in Table 357.

Table 357 Information Sense Data Descriptor Format

Byte	Bit							
	7	6	5	4	3	2	1	0
0	Descriptor Type (00h)							
1	Additional Length (0Ah)							
2	VALID	Reserved						
3	Reserved							
4-11	Information							

Descriptor Type Set to 00h for Information Sense Data Descriptor.

Additional Length Set to 0Ah for Information Sense Data Descriptor.

VALID This bit is set to 1 when content of the Information field is valid, and set to 0 if the Information field is invalid.

Information This field contains an LBA or other information depending on the value of the ILI bit in the Block Command Sense Descriptor (See section 12.3.2.5 “Block Command Sense Descriptor (Byte 44 - 47)”).

- ILI = 0 (or if the descriptor is not present): The Information field contains the unsigned LBA associated with the sense key. The LBA reported will be within the LBA range of the command as defined in the CDB.

Note: An LBA other than the command LBA may be reported on the Reassign Block (07h) command.

- ILI = 1: The Information field contains the difference (residue) of the requested length in bytes. Negative values are indicated by two's complement notation.

For ABORTED COMMAND/INTERNAL TARGET FAILURE cases, the LBA information returned are not directly related to media error (media error may be due to an indirect cause).

12.3.2.2 Command-specific Sense Data Descriptor (Byte 20 - 31)

The Command-specific Sense Data Descriptor is stored in bytes 20 through 31 of the descriptor format sense data. Format of the format of Command-specific Sense Data Descriptor is shown in Table 358.

Table 358 Command-specific Sense Data Descriptor Format

Byte	Bit							
	7	6	5	4	3	2	1	0
0	Descriptor Type (01h)							
1	Additional Length (0Ah)							
2	Reserved							
3	Reserved							
4-11	Command-Specific Information							

Descriptor Type Set to 01h for Command-specific Sense Data Descriptor.

Additional Length Set to 0Ah for Command-specific Sense Data Descriptor.

Command-specific Information The value of this field is set the same ways as Command Specific Information field in fixed format sense data (See section 12.2.7 “Command Specific Information (Byte 8 through 11)”)

12.3.2.3 Sense Key Specific Sense Data Descriptor (Byte 32 - 39)

The Sense-key Specific Sense Data Descriptor is stored in bytes 32 through 39 of the descriptor format sense data. Format of Sense-key Specific Sense Data Descriptor is shown in Table 359.

Table 359 Information Sense Data Descriptor Format

Byte	Bit							
	7	6	5	4	3	2	1	0
0	Descriptor Type (02h)							
1	Additional Length (06h)							
2	Reserved							
3	Reserved							
4	SKSV	Sense Key Specific Bits						
5-6	Sense Key Specific Bytes							
7	Reserved							

Descriptor Type Set to 02h for Command-specific Sense Data Descriptor.

Additional Length Set to 06h for Command-specific Sense Data Descriptor.

Fields in byte 4 through 6 (including the **SKSV** bit, **Sense-Key Specific Bits**, and **Sense-Key Specific Bytes**):

These fields are set the same ways as byte 15 - 17 in fixed format sense data (See section 12.2.10 “Sense Key Specific (Byte 15 through 17)” for details).

12.3.2.4 Field Replaceable Unit (FRU) Sense Data Descriptor (Byte 40 - 43)

The Field Replaceable Unit (FRU) Sense Data Descriptor is stored in bytes 40 through 43 of descriptor format sense data. Format of Field Replaceable Unit (FRU) Sense Data Descriptor is shown in Table 360.

Table 360 Field Replaceable Unit Sense Data Descriptor Format

Byte	Bit							
	7	6	5	4	3	2	1	0
0	Descriptor Type (03h)							
1	Additional Length (02h)							
2	Reserved							
3	Field Replaceable Unit Code							

Descriptor Type Set to 03h for Field Replaceable Unit Sense Data Descriptor.

Additional Length Set to 02h for Field Replaceable Unit Sense Data Descriptor.

Command-specific Information This field is set the same way as the Field Replaceable Unit Code of fixed format sense data. (See section 12.2.9 “FRU: Field Replaceable Unit (Byte 14)”).

12.3.2.5 Block Command Sense Descriptor (Byte 44 - 47)

The Block Command Sense Data Descriptor is stored in bytes 44 through 47 of descriptor format sense data. Format of the Block Command Sense Data Descriptor is shown in Table 361.

Table 361 Block Command Sense Data Descriptor Format

Byte	Bit							
	7	6	5	4	3	2	1	0
0	Descriptor Type (05h)							
1	Additional Length (02h)							
2	Reserved							
3	Reserved=0		ILI	Reserved=0				

Descriptor Type Set to 05h for Block Command Sense Data Descriptor.

Additional Length Set to 02h for Block Command Sense Data Descriptor.

ILI: Value of the ILI bit is set to indicate what type of value is stored in the Information field of the Information Sense Data Descriptor (see section 12.3.2.1 “Information Sense Data Descriptor (Byte 8 - 19)” for details):

12.3.2.6 Vendor Unique Unit Error Sense Data Descriptor (Byte 48 – 51)

The Vendor Unique Unit Error Code Sense Data Descriptor is stored in bytes 48 through 51 of descriptor format sense data. Format of the Vendor Unique Unit Error Code Sense Data Descriptor is shown in Table 362.

Table 362 Vendor Unique Unit Error Code Sense Data Descriptor

Byte	Bit							
	7	6	5	4	3	2	1	0
0	Descriptor Type (80h)							
1	Additional Length (02h)							
2-3	Unit Error Code (UEC)							

Descriptor Type Set to 80h for Vendor Unique Unit Error Code Sense Data Descriptor.

Additional Length Set to 02h for Vendor Unique Unit Error Code Sense Data Descriptor.

Unit Error Code: This field contains the same value as the Vendor Unique Error Information field in fixed format sense data which gives detailed information about the error (See section 12.2.12 “Vendor unique error information (Byte 20 through 23)”). It contains a unique code which describes where the error was detected and which piece of hardware or microcode detected the error depending on current operation

12.3.2.7 Vendor Unique Physical Error Record Sense Data Descriptor (Byte 52-59)

The Vendor Unique Physical Error Record Sense Data Descriptor is stored in bytes 52 through 59 of descriptor format sense data. Format of the Vendor Unique Physical Error Record Sense Data Descriptor is shown in Table 363.

Table 363 Vendor Unique Physical Error Record Sense Data Descriptor

Byte	Bit							
	7	6	5	4	3	2	1	0
0	Descriptor Type (81h)							
1	Additional Length (06h)							
2-7	Physical Error Record							

Descriptor Type Set to 81h for Vendor Unique Unit Physical Error Record Sense Data Descriptor.

Additional Length Set to 06h for Vendor Unique Unit Physical Error Record Sense Data Descriptor.

Unit Error Code: This field is set the same way as the Physical Error Record in fixed format sense data. (See section 12.2.13 “Physical Error Record (Product Specific Information) (Byte 24 thru 29)” for details).

13 Appendix. UEC list

Following is the list of Unit Error Codes and associated descriptions. The Unit Error Codes are returned by the target in sense data bytes 20-21.

The list of Unit Error Codes and descriptions does not have a direct correlation to the error descriptions and Sense Key/Code/Qualifier descriptions in Section 10 “Additional information”. These codes are used internally by WDC and may change without notice.

How to find a specific UEC

The second hex digit indicates the grouping, e.g. interface, media, servo, etc. types of errors. The table is sorted without regard to the first hex digit; instead, sorting is by the least significant three hex digits.

Table 364 Unit Error Codes

UEC	Description
0000	No Error
F101	BATS error: Reserved Area - Invalid request
F102	BATS error: Reserved Area - Broken
F103	BATS error: Reserved Area - Invalid version
F104	BATS error: Reserved Area - Invalid checksum
F105	BATS error: Reserved Area - Invalid eyecatcher
F106	BATS error: Reserved Area - Invalid main header checksum
F107	BATS error: Reserved Area - Invalid read length
F108	BATS error: Reserved Area - Address boundary error
1109	BATS error: Reserved Area - Error reading first copy
F10D	BATS error: Reserved Area - Write fix hard error
F10E	BATS error: Reserved Area - EPO Flash Log
F111	BATS error: RAM code load error
F112	BATS error: RAM code check
F113	BATS error: Exception in primary FW image
F114	BATS error: Reserved Area - Invalid request
F118	BATS#2 error: Seek test error
F119	BATS#2 error: Read/write test error
F11B	BATS#2 error: CRC test error
F11C	BATS#2 error: XOR test error
F11D	BATS error: Incorrect Disk Code
F11E	SoC compatibility failure
F11F	HI test: No command slot available
F120	BATS error: Code Compatibility Failure
F121	HI test: Loopback sector compare failure
F122	HI test: Failed to gain word sync
F123	BATS error: Reserved map index too large
F124	Bring-up error
F125	BATS error: Invalid RID/FID
F126	BATS error: Code checksum error
F127	BATS error: Invalid header
F12A	DRAM test error
F12B	BATS error: Reserved area - invalid model
F12C	Host Interface Test: Port active error
F12D	Format Reserved: FAT Size Exceeded Error
F12E	Format Reserved: Insufficient DIRS Good Error
F12F	Format Reserved: Insufficient FATS Good Error
F130	BATS error: Incorrect Customer Code
F131	Flash timeout
F132	GEM FH track read error
F133	BATS error: Vendor ID mismatch

F134	Head Health Check data compare error
F135	Head Health Check unrecovered media error
F136	BATS#2 error: End-To-End Data Protection error
F137	Flash ECC error
1138	BATS error: Primary Flash Not Ready
F139	Format Reserved: Resize RID/FID Error
F13A	Format Reserved: Too many RDEF entries
F13C	BATS error: NCDE DRAM failure
F13D	BATS error: Invalid Code Signature
F13E	BATS#2 error: TCG Test Failed
F13F	BATS#2 error: Read/Write Test Compare Failed
F140	Format Reserved: Too many Defects Error
F141	BATS#2 error Read/Write Test Compare Failed
F142	ATA Diagnostic Code: No Error
F143	ATA Diagnostic Code: Formatter Error
F144	ATA Diagnostic Code: Sector Buffer Error
F145	BATS#2 error: EDC Compare Test error
F146	BATS#2 error: EDC Encryption Test error
F147	ATA Diagnostic Code: Read/Write Test Error
F148	BATS error: Still broken after clear
F149	BATS#2 error: Security: AES Error
F14A	BATS#2 error: Security: RSA Error
F14B	BATS#2 error: Security: DRGB Error
F14C	BATS#2 error: Security: SHA256 Error
F14D	BATS#2 error: Security: HMAC Error
F14E	BATS#2 error: Security: Hardware AES Error
F14F	BATS#2 error: Security: Hardware SHA256 Error
1201	Sanity: Error In UEC Class
1202	Sanity: Error In UEC Cause
F203	Sanity: Sanity Check Failure
F204	Reassign reserved area media error
F205	G-list full - can't reassign any more sectors
F206	No spares available
F208	Mode Page Structure Mismatch
F209	Miscompare of SBA in the P-List
F20B	DSLT: Invalid number of splits
F20C	DSLT: Invalid relaxed format
F20D	DSLT: First Fragment too large
F20E	DSLT: Invalid end offset
F20F	DSLT: Cycle not complete
F220	MFG: Consistency Check failed
F221	MFG: General Align Tables Missing
F222	Failed to reserve MFG slots
F230	SEC_MGR: AES Hardware Error
F231	SEC_MGR: BDE Unwrap Error
F240	SEC_MGR: PRNG Seed Error
F241	SEC_MGR: PRNG General Error
F250	WRITE Uncorrectable Flagged Limit
1301	Motor: Recovered internal error
F302	Motor: Unrecovered internal error
1303	Motor: Recovered Open Loop Commutation failure
F304	Motor: Unrecovered Open Loop Commutation failure
1305	Motor: Recovered No feedback detected error
F306	Motor: Unrecovered No feedback detected error
1307	Motor: Recovered Settle timeout

F308	Motor: Unrecovered Settle timeout
1309	Motor: Recovered Gross speed error
F30A	Motor: Unrecovered Gross speed error
130B	Motor: Recovered 12V OK error
F30C	Motor: Unrecovered 12V OK error
130D	Motor: Recovered Speed error
F30E	Motor: Unrecovered Speed error
130F	Motor: Recovered Spindle Current error
F310	Motor: Unrecovered Spindle Current error
1311	Motor: Recovered Internal 12V not OK timeout
F312	Motor: Unrecovered Internal 12V not OK timeout
1313	Motor: Recovered Inductive Sense measurement timeout
F314	Motor: Unrecovered Inductive Sense speed error
1315	Motor: Recovered Spin Sense speed error
F316	Motor: Unrecovered Spin Sense speed error
1317	Motor: Recovered Spin Sense timeout
F318	Motor: Unrecovered Spin Sense timeout
1319	Motor: Recovered Target speed error
F31A	Motor: Unrecovered Target speed error
F31C	Motor: Unrecovered Power driver version error
131D	Motor: Recovered Over current error
F31E	Motor: Unrecovered Over current error
131F	Motor: Recovered System clock watchdog error
F320	Motor: Unrecovered System clock watchdog error
1321	Motor: Recovered Negative regulator fault
F322	Motor: Unrecovered Negative regulator fault
1323	Motor: Recovered Module overtemp error
F324	Motor: Unrecovered Module overtemp error
1325	Motor: Recovered 12V or 5V OK error
F326	Motor: Unrecovered 12V or 5V OK error
1327	Motor: Recovered unknown error
F328	Motor: Unrecovered unknown error
1329	Motor: Recovered VCM DAC watchdog error
F32A	Motor: Unrecovered VCM DAC watchdog error
132B	Motor: Recovered Module mid-die overtemp fault
F32C	Motor: Unrecovered Module mid-die overtemp fault
132D	Motor: Recovered Module Vcmp hi-side overtemp fault
F32E	Motor: Unrecovered Module Vcmp hi-side overtemp fault
132F	Motor: Recovered Module Vcmn hi-side overtemp fault
F330	Motor: Recovered Module Vcmn hi-side overtemp fault
1331	Motor: Recovered Invalid standby RPM request
F332	Motor: Unrecovered Invalid standby RPM request
1333	Motor: Recovered Invalid spin state request
F334	Motor: Unrecovered Invalid spin state request
1335	Motor: Recovered Hardware retract timeout
F336	Motor: Unrecovered Hardware retract timeout
1337	Motor: Recovered thermal limit exceeded
F338	Motor: Unrecovered thermal limit exceeded
1339	Motor: Recovered Predriver fault
F33A	Motor: Unrecovered Predriver fault
133B	Motor: Recovered Predriver Watchdog Fsys error
F33C	Motor: Unrecovered Predriver Watchdog Fsys error
133D	Motor: Recovered Predriver Watchdog DAC error
F33E	Motor: Unrecovered Predriver Watchdog DAC error
133F	Motor: Recovered Predriver Speed Low error
F340	Motor: Unrecovered Predriver Speed Low error
1341	Motor: Recovered Predriver UV Vboost error

F342	Motor: Unrecovered Predriver UV Vboost error
1343	Motor: Recovered Predriver NREG UV error
F344	Motor: Unrecovered Predriver NREG UV error
1345	Motor: Recovered Predriver Ext NPOR error
F346	Motor: Unrecovered Predriver Ext NPOR error
1347	Motor: Recovered Predriver Reg UV error
F348	Motor: Unrecovered Predriver Reg UV error
1349	Motor: Recovered Predriver Under Voltage 12 Volt Supply error
F34A	Motor: Unrecovered Predriver Under Voltage 12 Volt Supply error
134B	Motor: Recovered Predriver Under Voltage 5 Volt Supply error
F34C	Motor: Unrecovered Predriver Under Voltage 5 Volt Supply error
134D	Motor: Recovered Predriver Over Voltage 12 Volt Supply error
F34E	Motor: Unrecovered Predriver Over Voltage 12 Volt Supply error
134F	Motor: Recovered Predriver Under Voltage 1.8 Volt Supply error
F350	Motor: Unrecovered Predriver Under Voltage 1.8 Volt Supply error
1351	Motor: Recovered Predriver Under Voltage 0.9 Volt Supply error
F352	Motor: Unrecovered Predriver Under Voltage 0.9 Volt Supply error
1353	Motor: Recovered Predriver Under Voltage 1.5 Volt Supply error
F354	Motor: Unrecovered Predriver Under Voltage 1.5 Volt Supply error
1355	Motor: Recovered Predriver Shock Detected error
F356	Motor: Unrecovered Predriver Shock Detected error
1357	Motor: Recovered Predriver Over Temperature error
F358	Motor: Unrecovered Predriver Over Temperature error
1359	Motor: Recovered Predriver Under Voltage 3.3 Volt Supply error
F35A	Motor: Unrecovered Predriver Under Voltage 3.3 Volt Supply error
135B	Motor: Recovered Predriver Under Voltage 5 and 12 Volt Supply error
F35C	Motor: Unrecovered Predriver Under Voltage 5 and 12 Volt Supply error
135D	Motor: Recovered Predriver Error in Enabling Power Saving Mode
F35E	Motor: Unrecovered Predriver Error in Enabling Power Saving Mode
135F	Motor: Recovered Predriver Fault in Auto Retract
F360	Motor: Unrecovered Predriver Fault in Auto Retract
1361	Motor: Recovered Predriver Error in Utilizing External Power Supply
F362	Motor: Unrecovered Predriver Error in Utilizing External Power Supply
1363	Motor: Recovered Predriver Regulator Supply Fault
F364	Motor: Unrecovered Predriver Regulator Supply Fault
1365	Motor: Recovered Predriver Voltage Offset Calibration Error
F366	Motor: Unrecovered Predriver Voltage Offset Calibration Error
1367	Motor: Recovered Predriver BEMF Gain Calibration Error
F368	Motor: Unrecovered Predriver BEMF Gain Calibration Error
1369	Motor: Recovered Predriver BEMF Unload Calibration Error
F36A	Motor: Unrecovered Predriver BEMF Unload Calibration Error
136B	Motor: Recovered Predriver VCM Short Error
F36C	Motor: Unrecovered Predriver VCM Short Error
136D	Motor: Recovered Predriver NREG disable error
F36E	Motor: Unrecovered Predriver NREG disable error
136F	Motor: Recovered IDCS Calibration Measurement 1 Error
F370	Motor: Unrecovered IDCS Calibration Measurement 1 Error
1371	Motor: Recovered IDCS Calibration Measurement 2 Error
F372	Motor: Unrecovered IDCS Calibration Measurement 2 Error
1373	Motor: Recovered IDCS Calibration Saturation Error
F374	Motor: Unrecovered IDCS Calibration Saturation Error
1375	Motor: Recovered IDCS Calibration Adjustment Error
F376	Motor: Unrecovered IDCS Calibration Adjustment Error
1377	Motor: Recovered Predriver VDUAL over current
F378	Motor: Unrecovered Predriver VDUAL over current
1379	Motor: Recovered Predriver NEG Chargepump Fault
F37A	Motor: Unrecovered Predriver NEG Chargepump Fault

137B	Motor: Recovered Predriver VGH Fault
F37C	Motor: Unrecovered Predriver VGH Fault
137D	Motor: Recovered Predriver Ext Interrupt
F37E	Motor: Unrecovered Predriver Ext Interrupt
137F	Motor: Recovered Predriver Ext Fault
F380	Motor: Unrecovered Predriver Ext Fault
1381	Motor: Recovered PMIC Not Detected
F382	Motor: Unrecovered PMIC Not Detected
1383	Motor: Recovered Get MA Error
F384	Motor: Unrecovered Get MA Error
1385	Motor: Recovered Unexpected HD on Ramp
F386	Motor: Unrecovered Unexpected HD on Ramp
1387	Motor: Recovered VCPDSA Driver Failure
F388	Motor: Unrecovered VCPDSA Driver Failure
1389	Motor: Recovered Motor Start Timeout
F38A	Motor: Unrecovered Motor Start Timeout
138B	Motor: Recovered Motor PMIC UV12
F38C	Motor: Unrecovered Motor PMIC UV12
138D	Motor: Recovered Motor PMIC UV5
F38E	Motor: Unrecovered Motor PMIC UV5
138F	Motor: Recovered Motor PMIC UV09
F390	Motor: Unrecovered Motor PMIC UV09
1391	Motor: Recovered Motor PMIC OT12
F392	Motor: Unrecovered Motor PMIC OT12
1393	Motor: Recovered Motor PMIC OT5
F394	Motor: Unrecovered Motor PMIC OT5
1395	Motor: Recovered Motor PMIC EOTW12
F396	Motor: Unrecovered Motor PMIC EOTW12
1397	Motor: Recovered Motor PMIC EOTW5
F398	Motor: Unrecovered Motor PMIC EOTW5
1399	Motor: Recovered Motor PMIC OC12
F39A	Motor: Unrecovered Motor PMIC OC12
139B	Motor: Recovered Motor PMIC OC5
F39C	Motor: Unrecovered Motor PMIC OC5
139D	Motor: Recovered Motor PMIC OC09
F39E	Motor: Unrecovered Motor PMIC OC09
139F	Motor: Recovered Motor PMIC OV12
F3A0	Motor: Unrecovered Motor PMIC OV12
13A1	Motor: Recovered Motor PMIC OV5
F3A2	Motor: Unrecovered Motor PMIC OV5
13A3	Motor: Recovered I2C READ Error
F3A4	Motor: Unrecovered I2C READ Error
13A5	Motor: Recovered I2C WRITE Error
F3A6	Motor: Unrecovered I2C WRITE Error
13A7	Motor: Recovered PMIC not supported
F3A8	Motor: Unrecovered PMIC not supported
1401	Servo: Recovered Requested rezero head does not exist
F402	Servo: Unrecovered Requested rezero head does not exist
1403	Servo: Recovered Back EMF movement in progress
F404	Servo: Unrecovered Back EMF movement in progress
1405	Servo: Recovered Back EMF timeout error
F406	Servo: Unrecovered Back EMF timeout error
1407	Servo: Recovered ADC conversion timeout
F408	Servo: Unrecovered ADC conversion timeout
1409	Servo: Recovered Load/unload calibration error
F40A	Servo: Unrecovered Load/unload calibration error

140B	Servo: Recovered Invalid 5 volts
F40C	Servo: Unrecovered Invalid 5 volts
140D	Servo: Recovered Invalid 12 volts
F40E	Servo: Unrecovered Invalid 12 volts
140F	Servo: Recovered Invalid harmonic requested
F410	Servo: Unrecovered Invalid harmonic requested
1411	Servo: Recovered Sharp DRAM Parity error
F412	Servo: Unrecovered Sharp DRAM Parity error
1413	Servo: Recovered Sharp DRAM Parity Rate error
F414	Servo: Unrecovered Sharp DRAM Parity Rate error
1415	Servo: Recovered Invalid temperature
F416	Servo: Unrecovered Invalid temperature
1417	Servo: Recovered Truncated rezero
F418	Servo: Unrecovered Truncated rezero
1419	Servo: Recovered Heads not loaded
F41A	Servo: Unrecovered Heads not loaded
141B	Servo: Recovered Current error
F41C	Servo: Unrecovered Current error
141D	Servo: Recovered Seek timeout
F41E	Servo: Unrecovered Seek timeout
141F	Servo: Recovered Seek error
F420	Servo: Unrecovered Seek error
1421	Servo: Recovered Track following error
F422	Servo: Unrecovered Track following error
1423	Servo: Recovered Track follow timeout
F424	Servo: Unrecovered Track follow timeout
1425	Servo: Recovered KT Seek out of range
F426	Servo: Unrecovered KT Seek out of range
1427	Servo: Recovered DAC Offset calibration error
F428	Servo: Unrecovered DAC Offset calibration error
1429	Servo: Recovered Load speed error
F42A	Servo: Unrecovered Load speed error
142B	Servo: Recovered RRO Calibration timeout
F42C	Servo: Unrecovered RRO Calibration timeout
142D	Servo: Recovered ADC Calibration error
F42E	Servo: Unrecovered ADC Calibration error
142F	Servo: Recovered ADC Offset error
F430	Servo: Unrecovered ADC Offset error
1431	Servo: Recovered ADC Limit error
F432	Servo: Unrecovered ADC Limit error
1433	Servo: Recovered Balancer Resistance error
F434	Servo: Unrecovered Balancer Resistance error
1435	Servo: Recovered Balancer Resistance Limit error
F436	Servo: Unrecovered Balancer Resistance Limit error
1437	Servo: Recovered First Cylinder error
F438	Servo: Unrecovered First Cylinder error
1439	Servo: Recovered Valid Cylinder error
F43A	Servo: Unrecovered Valid Cylinder error
143B	Servo: Recovered ADC Saturation error
F43C	Servo: Unrecovered ADC Saturation error
143D	Servo: Recovered Latch Break timeout
F43E	Servo: Unrecovered Latch Break timeout
143F	Servo: Recovered MR Resistance out of range error
F440	Servo: Unrecovered MR Resistance out of range error
1441	Servo: Recovered VCM Retract error
F442	Servo: Unrecovered VCM Retract error
1443	Servo: Recovered Load Retry error

F444	Servo: Unrecovered Load Retry error
1445	Servo: Recovered DFT Sharp error
F446	Servo: Unrecovered DFT Sharp error
1447	Servo: Recovered Load/Unload state error
F448	Servo: Unrecovered Load/Unload state error
1449	Servo: Recovered TFCR out-of-range error
F44A	Servo: Unrecovered TFCR out-of-range error
144B	Servo: Recovered Measure GMR Timeout
F44C	Servo: Unrecovered Measure GMR Timeout
144D	Servo: Recovered Coil Resistance Measurement Failure
F44E	Servo: Unrecovered Coil Resistance Measurement Failure
144F	Servo: Recovered SHARP Parity Error
F450	Servo: Unrecovered SHARP Parity Error
1451	Servo: Recovered SHARP Parity Rate Error
F452	Servo: Unrecovered SHARP Parity Rate Error
1453	Servo: Recovered SHARP Decode Error
F454	Servo: Unrecovered SHARP Decode Error
1455	Servo: Recovered SHARP Decode Rate Error
F456	Servo: Unrecovered SHARP Decode Rate Error
1457	Servo: Recovered SHARP Timeout Error
F458	Servo: Unrecovered SHARP Timeout Error
1459	Servo: Recovered SHARP Timeout Rate Error
F45A	Servo: Unrecovered SHARP Timeout Rate Error
145B	Servo: Recovered SHARP Other Error
F45C	Servo: Unrecovered SHARP Other Error
145D	Servo: Recovered SHARP Other Rate Error
F45E	Servo: Unrecovered SHART Other Rate Error
145F	Servo: Recovered WCS Hang Error
F460	Servo: Unrecovered WCS Hang Error
1461	Servo: Recovered DFT Timeout Error
F462	Servo: Unrecovered DFT Timeout Error
1463	Servo: Recovered SDM Timeout Error
F464	Servo: Unrecovered SDM Timeout Error
1465	Servo: Recovered RRO Write Error
F466	Servo: Unrecovered RRO Write Error
1467	Servo: Recovered Velocity Error
F468	Servo: Unrecovered Velocity Error
1469	Servo: Recovered Start SID Incorrect Error
F46A	Servo: Unrecovered Start SID Incorrect Error
146B	Servo: Recovered End Sid Incorrect Error
F46C	Servo: Unrecovered End Sid Incorrect Error
146D	Servo: Recovered Measure GMR SDM Failure
F46E	Servo: Unrecovered Measure GMR SDM Failure
146F	Servo: Recovered VCM Free Speed Error
F470	Servo: Unrecovered VCM Free Speed Error
1471	Servo: Recovered Emergency Brake Timeout Error
F472	Servo: Unrecovered Emergency Brake Timeout Error
1473	Servo: Recovered Excessive Current Error
F474	Servo: Unrecovered Excessive Current Error
1475	Servo: Recovered Excessive Velocity Error
F476	Servo: Unrecovered Excessive Velocity Error
F477	Servo: Unrecovered Invalid SDM CDB Error
F478	Servo: Unrecovered Invalid SDM Descriptor Error
F479	Servo: Unrecovered Invalid DFT Descriptor Error
F47A	Servo: Unrecovered SDM or DFT Allocation Error
F47B	Servo: Unrecovered SDM OR DFT Transfer Error
F47C	Servo: Unrecovered SDM Physical Parameter Error

147D	Servo: Recovered RROF SDM Timeout Error
F47E	Servo: Unrecovered RROF SDM Timeout Error
147F	Servo: Recovered RROF Over Limit Error
F480	Servo: Unrecovered RROF Over Limit Error
F481	Servo: Unrecovered Self-Test Failed
1482	Servo: Recovered Measure Asymmetry SDM Failure
F483	Servo: Unrecovered Measure Asymmetry SDM Failure
F484	Servo: Unrecovered Measure Overwrite SDM Failure
F485	Servo: Unrecovered TFC Utility SDM Failure
1486	Servo: Recovered Milli-Calibration Error
F487	Servo: Unrecovered Milli-Calibration Error
F488	Servo: Unrecovered SIDSAT Timeout Error
F489	Servo: Unrecovered SDM Load-And-Drop-Anchor Error
F48A	Servo: Unrecovered Filter Table Full Error
F48B	Servo: Unrecovered Filter Table Invalid Error
148C	Servo: Recovered Measure Qsamp SDM Failure
F48D	Servo: Unrecovered Measure Qsamp SDM Failure
148E	Servo: Recovered Tilt Calibration Error
F48F	Servo: Unrecovered Tilt Calibration Error
1490	Servo: Recovered Tilt Numerical Error
F491	Servo: Unrecovered Tilt Numerical Error
F492	Servo: Unrecovered Milli Table Load Error
F493	Servo: Unrecovered TFCR DAC Out of Range
F494	Servo: Unrecovered MRR DAC Out of Range
F495	Servo: Unrecovered TFCR Open/Short
1496	Servo: Recovered DTID Inhibit Error
F497	Servo: Unrecovered DTID Inhibit Error
1498	Servo: Recovered Waketime Error
F499	Servo: Unrecovered Waketime Error
149A	Servo: Recovered SHARP Pulse TFC Entry Error
F49B	Servo: Unrecovered SHARP Pulse TFC Entry Error
149C	Servo: Recovered Heads Not Loaded FFSULI
F49D	Servo: Unrecovered Heads Not Loaded FFSULI
149E	Servo: Recovered Load Abort FFSULI
F49F	Servo: Unrecovered Load Abort FFSULI
14A0	Servo: Recovered IDLEA Grab Error
F4A1	Servo: Unrecovered IDLEA Grab Error
14A2	Servo: Recovered IDLEA Seek Error
F4A3	Servo: Unrecovered IDLEA Seek Error
14A4	Servo: Recovered AVEDAC Error
F4A5	Servo: Unrecovered AVEDAC Error
14A6	Servo: Recovered IDLEA Exit Timeout Error
F4A7	Servo: Unrecovered IDLEA Exit Timeout Error
14A8	Servo: Recovered IDLEA Long Seek Error
F4A9	Servo: Unrecovered IDLEA Long Seek Error
14AA	Servo: Recovered IDLEA SID ACQ Error
F4AB	Servo: Unrecovered IDLEA SID ACQ Error
14AC	Servo: Recovered ODCS Detect Error
F4AD	Servo: Unrecovered ODCS Detect Error
14AE	Servo: Recovered Unexpected Motion Error
F4AF	Servo: Unrecovered Unexpected Motion Error
14B0	Servo: Recovered BEMF Loop Error
F4B1	Servo: Unrecovered BEMF Loop error
14B2	Servo: Recovered BEMF DTID Error
F4B3	Servo: Unrecovered BEMF DTID Error
14B4	Servo: Recovered BEMF Lock Error
F4B5	Servo: Unrecovered BEMF Lock Error

14B6	Servo: Recovered BEMF Fail Error
F4B7	Servo: Unrecovered BEMF Fail Error
14B8	Servo: Recovered BEMF Speed Error
F4B9	Servo: Unrecovered BEMF Speed Error
14BA	Servo: Recovered Measure GTM SDM Failure
F4BB	Servo: Unrecovered Measure GTM SDM Failure
14BC	Servo: Recovered SAM2SG SDM Failure
F4BD	Servo: Unrecovered SAM2SG SDM Failure
14BE	Servo: Recovered Invalid MULTRG Descriptor Error
F4BF	Servo: Unrecovered Invalid MULTRG Descriptor Error
14C0	Servo: Recovered Filter COEF Overflow
F4C1	Servo: Unrecovered Filter COEF Overflow
14C2	Servo: Recovered WCS Watchdog Expire
F4C3	Servo: Unrecovered WCS Watchdog Expire
F4C4	Servo: Unrecovered DFTSQZ Timeout Error
F4C6	Servo: Unrecovered Measure HS SDM Failure
14C7	Servo: Recovered HD on RAMP SWCAL Unload
F4C8	Servo: Unrecovered HD on RAMP SWCAL Unload
14C9	Servo: Recovered HD on RAMP SWCAL IDsearch
F4CA	Servo: Unrecovered HD on RAMP SWCAL IDsearch
14CB	Servo: Recovered IDLEA Check CMPLT Error
F4CC	Servo: Unrecovered IDLEA Check CMPLT Error
14CD	Servo: Recovered IDLEA Time Base Duration
F4CE	Servo: Unrecovered IDLEA Time Base Duration
14CF	Servo: Recovered Emergency Brake Duration
F4D0	Servo: Unrecovered Emergency Brake Duration
14D1	Servo: Recovered VCM Free Duration
F4D2	Servo: Unrecovered VCM Free Duration
14D5	Servo: Recovered Search Mode Duration
F4D6	Servo: Unrecovered Search Mode Duration
14D7	Servo: Recovered Invalid Seek Target
F4D8	Servo: Unrecovered Invalid Seek Target
14D9	Servo: Recovered safe zone seek error
F4DA	Servo: Unrecovered safe zone seek error
14DB	Servo: Recovered head switch at safe zone fail
F4DC	Servo: Unrecovered head switch at safe zone fail
F4DE	Servo: Seek Length histogram bin order error
F501	Host Interface: Logical unit not ready
F502	Host Interface: Logical unit becoming ready
F503	Host Interface: Logical unit not ready - initializing command required
F504	Host Interface: Not ready - format in progress
F505	Host Interface: Not ready - self-test in progress
F506	Host Interface: Reassign failed
F507	Host Interface: Format failed
F508	Host Interface: Not Ready - Session opened
F509	Host Interface: In Self-Test - Band locked
F50B	Host Interface: Not Ready - Sanitize in progress
F50C	Host Interface: Sanitize Command failed
F50D	Host Interface: Phy Test Function in Progress
F510	Host Interface: Host Interface Error forced
F511	Host Interface: Illegal Request Sequence Error
F512	Host Interface: Invalid Message
F513	Host Interface: No ready microcode activation required
F514	Host Interface: Not ready to ready transition
F516	Host Interface: Power on reset
F517	Host Interface: SAS Hard Reset (SAS)

F518	Host Interface: LUN Reset (SAS)
F519	Host Interface: Self initiated reset
F51C	Host Interface: Mode parameters changed
F51D	Host Interface: Log parameters changed
F51E	Host Interface: Reservations pre-empted
F51F	Host Interface: Reservations released
F520	Host Interface: Registrations pre-empted
F521	Host Interface: Commands cleared by another initiator
F522	Host Interface: Microcode changed
F524	Host Interface: Capacity Data Changed
F525	Host Interface: Timestamp Changed
F526	Primary FW image is degraded - booting from secondary
F52D	Host Interface: Buffer CRC error on read
F52E	Host Interface: Internal target failure
F534	Host Interface: Overlapped command attempted
F535	Host Interface: Miscompare during verify
F536	Host Interface: Reservation conflict
F537	Host Interface: Device identifier changed
F53E	Host Interface: Data phase error
F53F	Host Interface: Abort by OOB (SAS)
F544	Host Interface: Echo buffer overwritten
F54A	Host Interface: Xfer Ready credit exceeded
F54B	Host Interface: Transfer length error
F54E	Host Interface: Data Phase CRC Error
F550	Host Interface: NAK rcvd (SAS)
F551	Host Interface: ACK NAK Timeout (SAS)
F552	Host Interface: Bad parameter offset (SAS)
F553	Host Interface: LUN Not ready, Notify (Enable Spinup) required (SAS)
F554	Host Interface: I_T_Nexus Loss Occurred (SAS)
F555	Host Interface: Initiator Response Timeout (SAS)
F556	LUN Not ready, Power Grant required (SAS)
F560	Host Interface: Too much write data (SAS)
F561	Host Interface: Information unit too short (SAS)
F562	Host Interface: Information unit too long (SAS)
F567	Host Interface: Insufficient registration resources
F568	Host Interface: End-to-End Data Protection Guard check
F569	Host Interface: End-to-End Data Protection Application Tag check
F56A	Host Interface: End-to-End Data Protection Reference Tag check
F56B	Host Interface: ECC error in DRAM customer data area
F56C	Host Interface: Uncorrectable DRAM ECC error
F570	Host Interface: Host interface Synchronous CRC error
F572	Host Interface: LUN not ready; manual intervention required
F573	Host Interface: Commands cleared due to power failure event (SAS)
F579	Host Interface: Data Checksum Error
F57A	Host Interface: Synchronous CRC Error on Write
F57B	Host Interface: Synchronous CRC LBA Error
F57D	Host Interface: Break Received (SAS only)
1601	Channel/AE: Recovered Internal Logic Error
1602	AE: Recovered IVC fault error
F603	AE: Unrecovered IVC fault error
F604	Channel/AE: Unrecovered Internal Calibration Error
F605	Channel/AE: Unrecovered Internal MR Calibration Error
1606	AE: Recovered AE Last Data Read Error
F607	Channel/AE: Unrecovered data with PPM or precomp load
1609	AE: Recovered TFC Short Error
F60A	AE: TFC Short Error

160B	AE: Recovered Shorted MR Element Error
F60C	AE: Unrecovered Shorted MR Element Error
F60D	Unsupported Read Channel Command Error
F60E	Init: RRClk Dead Error
F60F	Init: RRClk Unlock Error
1610	AE: Recovered ECS Shorted Fault
F611	AE: Unrecovered ECS Shorted Fault
1612	AE: Recovered ECS Open Fault
F613	AE: Unrecovered ECS Open Fault
1614	AE: Recovered ECS Fault
F615	AE: Unrecovered ECS Fault
1616	Channel: Recovered Channel Error
F617	Channel: Unrecovered Channel Error
1618	AE: Recovered STO current fault error
F619	Init: SVCLK Unlock Error
161A	AE: Recovered Open MR Element Error
F61B	AE: Unrecovered Open MR Element Error
161C	AE: Recovered IC Over Temperature Error
F61D	AE: Unrecovered IC Over Temperature Error
161E	AE: Recovered IP Clock Count Error
F61F	AE: Unrecovered IP Clock Count Error
1620	AE: Recovered DLC SVCLK Error
F621	AE: Unrecovered DLC SVCLK Error
1622	AE: Recovered Write Data BLS Error
F623	AE: Unrecovered Write Data BLS Error
1624	AE: Recovered STO short fault error
F625	AE: Unrecovered ECSR Dac Out of Range
1626	AE: Recovered Power Supply Error
F627	AE: Unrecovered Power Supply Error
1628	AE: Recovered Open Write Head Error
F629	AE: Unrecovered Open Write Head Error
162A	AE: Recovered Write Transition Error
F62B	AE: Unrecovered Write Transition Error
F62C	AE: Unrecovered I2C Command Error
F62D	AE: Unrecovered I2C Memory Read Error
162E	Channel: Recovered Channel NRZ Clear Timeout Error
F62F	Channel: Unrecovered Channel NRZ Clear Timeout Error
1630	AE: Recovered SPE Low In Write Fault
F631	AE: Unrecovered SPE Low In Write Fault
1632	AE: Recovered STO Open fault error
F633	Channel: Unrecovered Write Synth Unlock error
F635	Unrecovered CH WPTP Timeout
1636	AE: Recovered Short Write Head Error
F637	AE: Unrecovered Short Write Head Error
F638	AE: Unrecovered I2C 5V Register Data Error
F639	AE: Unrecovered I2C 12V Register Data Error
F63A	AE: Unrecovered I2C Memory Checksum Error
163C	AE: Recovered TFC Open Error
F63D	AE: Unrecovered TFC Open Error
163E	AE: Recovered SoC DIE Temperature Dropped Below Warning
163F	AE: Recovered SoC DIE Temperature Above Fatal
F640	AE: Unrecovered DCR Location Error
F641	AE: Unrecovered AE Burst overlapped Error
F642	AE: Unrecovered Software Readback Error
F643	AE: Unrecovered Readback Error
F645	AE: Unrecovered Latch Fault Error
1646	AE: Recovered CHN Power Sequence Error

F647	AE: Unrecovered CHN Power Sequence Error
1648	Channel: Recovered Reset Flag Error
F649	Channel: Unrecovered Reset Flag Error
164A	Channel: Recovered Gate Command Queue Underflow Error
F64B	Channel: Unrecovered Gate Command Queue Underflow Error
164C	Channel: Recovered Sector Size Fault Error
F64D	Channel: Unrecovered Sector Size Fault Error
164E	Channel: Recovered Last Split Fault Error
F64F	Channel: Unrecovered Last Split Fault Error
1650	Channel: Recovered Servo-Servo Overlap Error
F651	Channel: Unrecovered Servo-Servo Overlap Error
1652	Channel: Recovered Read Gate Fault Error
F653	Channel: Unrecovered Read Gate Fault Error
1654	Channel: Recovered RWBI Out Fault Error
F655	Channel: Unrecovered RWBI Out Fault Error
1656	Channel: Recovered No Write Clock Error
F657	Channel: Unrecovered No Write Clock Error
1658	Channel: Recovered No NRZ Clock Error
F659	Channel: Unrecovered No NRZ Clock Error
165A	Channel: Recovered Calibration Block Fault Error
F65B	Channel: Unrecovered Calibration Block Fault Error
165C	Channel: Recovered Mode Overlap Read Fault Error
F65D	Channel: Unrecovered Mode Overlap Read Fault Error
165E	Channel: Recovered Gate Command Queue Overflow Error
F65F	Channel: Unrecovered Gate Command Queue OverflowError
1660	Channel: Recovered Ending Write Splice Fault Error
F661	Channel: Unrecovered Ending Write Splice Fault Error
1662	Channel: Recovered Write Gate Overlap Fault Error
F663	Channel: Unrecovered Write Gate Overlap Fault Error
1664	Channel: Recovered Write Gate Fault Error
F665	Channel: Unrecovered Write Gate Fault Error
1666	Channel: Recovered Buffer Overflow Write Error
F667	Channel: Unrecovered Buffer Overflow Write Error
1668	Channel: Recovered Buffer Underflow Write Error
F669	Channel: Unrecovered Buffer Underflow Write Error
166A	Channel: Recovered Write Parity Error
F66B	Channel: Unrecovered Write Parity Error
166C	Channel: Recovered Buffer Overflow Read Error
F66D	Channel: Unrecovered Buffer Overflow Read Error
166E	Channel: Recovered CTG Wedge Slip Fault Error
F66F	Channel: Unrecovered CTG Wedge Slip Fault Read Error
1670	Channel: Recovered CTG Packet Late Fault Error
F671	Channel: Unrecovered CTG Packet Late Fault Error
1672	Channel: Recovered Baseline Instability Count Late Error
F673	Channel: Unrecovered Baseline Instability Count Late Error
1674	Channel: Recovered Preamp Count Fault Error
F675	Channel: Unrecovered Preamp Count Fault Error
1676	Channel: Recovered Pfault Read Error
F677	Channel: Unrecovered Pfault Read Error
1678	Channel: Recovered Pfault Write Error
F679	Channel: Unrecovered Pfault Write Error
167A	Channel: Recovered Last Data Fault Error
F67B	Channel: Unrecovered Last Data Fault Error
167C	Channel: Recovered WRPO Fault Error
F67D	Channel: Unrecovered WRPO Fault Error
167E	Channel: Recovered Forced Channel Fault Error
F67F	Channel: Unrecovered Forced Channel Fault Error

1680	Channel: Recovered PLLFloor Error
F681	Channel: Unrecovered PLLFloor Error
1682	Channel: Recovered Loss lock Error
F683	Channel: Unrecovered Loss lock Error
1684	Channel: Recovered VGA Floor Error
F685	Channel: Unrecovered VGA Floor Error
1686	Channel: Recovered Buffer EVGA Floor Error
F687	Channel: Unrecovered Buffer EVGA Floor Error
1688	Channel: Recovered TA Detector Error
F689	Channel: Unrecovered TA Detector Error
168A	Channel: Recovered NPLD Error
F68B	Channel: Unrecovered NPLD Error
168C	Channel: Recovered ZGR Flag Error
F68D	Channel: Unrecovered ZGR Flag Error
168E	Channel: Recovered DPLL Freq Flag Error
F68F	Channel: Recovered DPLL Freq Flag Error
1690	Channel: Recovered Massive Drop Out Detection Error
F691	Channel: Unrecovered Massive Drop Out Detection Error
1692	Channel: Recovered CTG Parameter Out of Bounds Error
F693	Channel: Unrecovered CTG Parameter Out of Bounds Flag Error
1694	Channel: Recovered Flaw Signal Sync Error
F695	Channel: Unrecovered Flaw Signal Sync Error
1696	Channel: Recovered ACQ Flag Error
F697	Channel: Unrecovered ACQ Flag Error
1698	Channel: Recovered No Clock Error
F699	Channel: Unrecovered No Clock Error
169A	Channel: Recovered PLL Loss lock Error
F69B	Channel: Unrecovered PLL Loss lock Error
F69D	Channel: Unrecovered ESNR Timeout Error
169E	Channel: Recovered ADC Sample Not Ready Error
F69F	Channel: Unrecovered ADC Sample Not Ready Error
F6A0	AE: Unrecovered Fuse Load Fail Error
F6A1	AE: Unrecovered Configuration Error
16A2	Channel: Recovered Auto RST NRZ-Clock Error
F6A3	Channel: Unrecovered Auto RST NRZ-Clock Error
16A4	Channel: Recovered Write CRC Fault Error
F6A5	Channel: Unrecovered Write CRC Fault Error
16A6	Channel: Recovered Read Synthesizer Loss of Lock Error
F6A7	Channel: Unrecovered Read Synthesizer Loss of Lock Error
16A8	Channel: Recovered RLL Parameter Error
F6A9	Channel: Unrecovered RLL Parameter Error
16AA	Channel: Recovered FIFO Underflow Error
F6AB	Channel: Unrecovered FIFO Underflow Error
16AC	Channel: Recovered FIFO Overflow Error
F6AD	Channel: Unrecovered FIFO Overflow Error
16AE	Channel: Recovered Iterative Decoder Error
F6AF	Channel: Unrecovered Iterative Decoder Error
16B0	Channel: Recovered Iterative Read Error
F6B1	Channel: Unrecovered Iterative Read Error
16B2	Channel: Recovered Encoder Overflow Error
F6B3	Channel: Unrecovered Encoder Overflow Error
16B4	Channel: Recovered Encoder Underflow Error
F6B5	Channel: Unrecovered Encoder Underflow Error
16B6	Channel: Recovered Encoder RAM CRC Error
F6B7	Channel: Unrecovered Encoder RAM CRC Error
16B8	Channel: Recovered Interface Fault
F6B9	Channel: Unrecovered Interface Fault

F6BB	Channel: Unrecovered QMM EVDump Parse Error
16BC	Channel: Recovered DiBit Timeout Error
F6BD	Channel: Unrecovered DiBit Timeout Error
16BE	Channel: Recovered MXP Write Fault
F6BF	Channel: Unrecovered MXP Write Fault
16C0	Channel: Recovered Data Jam Error
F6C1	Channel: Unrecovered Data Jam Error
16C2	Channel: Recovered Code-Word Out Of Order Error
F6C3	Channel: Unrecovered Code-Word Out Of Order Error
16C4	Channel: Recovered Read RLL Buffer CRC Flag Error
F6C5	Channel: Unrecovered Read RLL Buffer CRC Flag Error
16C6	Channel: Recovered Write RLL Buffer CRC Flag Error
F6C7	Channel: Unrecovered Write RLL Buffer CRC Flag Error
16C8	Channel: Recovered CTG No SAM Detected Fault Error
F6C9	Channel: Unrecovered CTG No SAM Detected Fault Error
16CA	Channel: Recovered ITI Adjust Preload Fault Track Error
F6CB	Channel: Unrecovered ITI Adjust Preload Fault Track Error
16CC	Channel: Recovered WTG SRV Fault Error
F6CD	Channel: Unrecovered WTG SRV Fault Error
16CE	Channel: Recovered CTG Engine Not Ready Fault Error
F6CF	Channel: Unrecovered CTG Engine Not Ready Fault Error
16D0	Channel: Recovered LLI Abort Fault Error
F6D1	Channel: Unrecovered LLI Abort Fault Error
16D2	Channel: Recovered Retry Fault Error
F6D3	Channel: Unrecovered Retry Fault Error
16D4	Channel: Recovered WTG Timeout Fault Error
F6D5	Channel: Unrecovered WTG Timeout Fault Error
16D6	Channel: Recovered ITI Fault TS Transfer All Error
F6D7	Channel: Unrecovered ITI Fault TS Transfer All Error
16D8	Channel: Recovered ITI Data Fault Error
F6D9	Channel: Unrecovered ITI Data Fault Error
F6DA	Channel: Unrecovered Insufficient TFC Preheat Error
F6DB	Channel: Unrecovered AE And FAEP Do Not Match
16DC	Channel: Recovered Data Jam Fault Error
F6DD	Channel: Unrecovered Data Jam Fault Error
16DE	Channel: Recovered Code-Word Out of Order Error
F6DF	Channel: Unrecovered Code-Word Out of Order Error
16E0	Channel: Recovered RLL Initialization Timeout Error
F6E1	Channel: Unrecovered RLL Initialization Timeout Error
F6E2	Channel: Unrecovered AEQ Timeout Error
F6E3	Channel: Unrecovered AEQ NLD Initialization Error
16E4	Channel: Recovered DLC out of criteria
F6E5	Channel: Unrecovered DLC out of criteria
16E7	Channel: Recovered Mode Overlap Write Error
F6E8	Channel: Unrecovered Mode Overlap Write Error
16E9	Channel: Recovered Ready Fault Error
F6EA	Channel: Unrecovered Ready Fault Error
16EB	Channel: Recovered Synchronous Abort Done Error
F6EC	Channel: Unrecovered Synchronous Abort Done Error
16ED	Channel: Recovered NRZ Clear Fault Error
F6EE	Channel: Unrecovered NRZ Clear Fault Error
16EF	Channel: Recovered Collision Fault Error
F6F0	Channel: Unrecovered Collision Fault Error
16F1	Channel: Recovered Read Synthesizer Precharge Fail Fault Error
F6F2	Channel: Unrecovered Read Synthesizer Precharge Fail Fault Error
16F3	Channel: Recovered Servo Synthesizer Precharge Fail Fault Error
F6F4	Channel: Unrecovered Servo Synthesizer Precharge Fail Fault Error

16F5	Channel: Recovered Read Synthesizer Loss of Lock Error
F6F6	Channel: Unrecovered Read Synthesizer Loss of Lock Error
16F7	Channel: Recovered Fragment Number Fault Error
F6F8	Channel: Unrecovered Fragment Number Fault Error
16F9	Channel: Recovered Preamble Quality Monitor Fault Error
F6FA	Channel: Unrecovered Preamble Quality Monitor Fault Error
F6FC	Channel: Unrecovered RTM Configuration Error
F6FD	Channel: Unrecovered RTM Failure Error
F6FE	Channel: Unrecovered RTM Timeout Error
F701	Format corrupted
F702	Too many notches
D703	Media: Auto Reallocated Write Error
1704	Media: Recovered Write Error - Recommend reassign
D705	Media: Error With OTF Correction - Reassigned
E706	Media: Error With OTF Correction - Recommend Reassign
E707	Media: Error With OTF Correction - Recommend Rewrite
E708	Media: Error With OTF Correction - Rewritten
1709	Media: Recovered Error With Offline Correction
D70A	Media: Error With Offline Correction - Reassigned
E70B	Media: Error With Offline Correction - Recommend Reassign
E70C	Media: Error With Offline Correction - Recommend Rewrite
170D	Media: IWV Verify Soft error
E70D	Media: Error With Offline Correction - Rewritten
E70E	Media: Recovered Data Address Mark Error - Rewritten
E70F	Media: Recovered Data Address Mark Error - Recommend Rewrite
D710	Media: Recovered Data Address Mark Error - Reassigned
E711	Media: Recovered Data Address Mark Error - Recommend Reassign
1712	Media: Recovered LBA MEDC Error
F713	Media: Unrecovered LBA MEDC Error
1714	Media: Recovered Sector Overflow Error
F715	Media: Unrecovered Sector Overflow Error
1716	Media: Recovered Write Overrun Error
F717	Media: Unrecovered Write Overrun Error
1718	Media: Recovered Sync Mark Retry Timeout
F719	Media: Unrecovered Sync Mark Retry Timeout
171A	Media: Recovered Sector miss cause watchdog expire
F71B	Media: Unrecovered Sector miss cause watchdog expire
D71C	Media: Internal rewrite skipped
F71D	Media: Unrecovered DRAM CRC Error
171E	Media: Recovered Read Latency Error
F71F	Media: Unrecovered Read Latency Error
F720	Media: RC Dump Overflow Error
F721	Media: Format Configuration Invalid
1722	Media: Recovered WRITE Overrun Servo Gate Active
F723	Media: Unrecovered WRITE Overrun Servo Gate Active
1724	Media: Recovered READ Overrun Servo Gate Active
F725	Media: Unrecovered READ Overrun Servo Gate Active
1726	Media: Recovered Internal Write Catch Error
F727	Media: Unrecovered Internal Write Catch Error
1728	Media: Recovered S2S MAX Flag Fault
F729	Media: Unrecovered S2S MAX Flag Fault
172A	Media: Recovered track ecc unrecoverable error
172B	Media: physical element status change
172C	Media: Recovered Data
F72D	Media: Unrecovered Uncorrectable Read Data error
172E	Media: Recovered Error on Last Data Read

F72F	Media: Unrecovered Error on Last Data Read
F730	Media: Recommend targeted scan
1731	Media: Recovered Write Fault
F732	Media: Unrecovered Write Fault
1733	Media: Recovered Read Write Abort Error
F734	Media: Unrecovered Read Write Abort Error
1735	Channel: Recovered No Sync Detected Error
F736	Channel: Unrecovered No Sync Detected Error
1737	Media: Recovered Post Write Abort Error
F738	Media: Unrecovered Post Write Abort
1739	Media: Recovered Post PES Check Write Abort Error
F73A	Media: Unrecovered Post PES Check Write Abort Error
173B	Media: Recovered Data Address Mark Error
F73C	Media: Unrecovered Data Address Mark Error
173D	Media: Recovered Sector Miss Error
F73E	Media: Unrecovered Sector Miss Error
F73F	Media: NFZ Table Full
F740	Media: Defect SID Table Full Error
F741	Media: OCT Timeout Not Dispatched
F742	Media: OCT Timeout In Recovery
F743	Media: OCT Timeout Executing
1744	Media: Recovered Sudden Stop Error
F745	Media: Unrecovered Sudden Stop Error
1746	Media: Recovered Defect List Format Not Supported Error
1747	Media: Recovered Primary Defect List Not Found Error
1748	Media: Recovered Grown Defect List Not Found Error
1749	Media: Recovered Partial Defect List Transferred Error
F74A	Media: Unrecovered Alternate Track Table Full Error
F74B	Media: Unrecovered Primary Defect List Error
F74C	Media: Unrecovered Grown Defect List Error
F74D	Media: Unrecovered Too Many Heads Error
F74E	Media: Unrecovered Skew Table Size Error
F74F	Media: Unrecovered Too Many Zones Error
F750	Media: Unrecovered Too Many SIDs Error
F751	Media: Unrecovered Alternate Track Table Full Error
F752	Media: Unrecovered Drive Capacity Too Small
F753	Media: Unrecovered G-list Full (Format command)
F754	Media: Unrecovered G-list Full (2) (Format command)
F755	Media: Unrecovered Pointer Repeat Size Error
F756	Media: Unrecovered DST Slot Size Error
F757	Media: Unrecovered P-list Full Error
F758	Media: Unrecovered Invalid NFZ Table Error
1759	Media: Recovered Unknown Error
F75A	Media: Unrecovered Unknown Error
F75B	Media: Unrecovered Too Many Sectors Error
F75C	Media: Unrecovered Internal Media Access Timeout Error
F75D	Media: Unrecovered Self-Test Failed Error
F75E	Media: Unrecovered Maximum Servo Cylinder Number Too Small Error
F75F	Media: Unrecovered SAT No Buffer Overflow Error
F760	Media: Unrecovered SAT Buffer Overflow Error
F761	Media: Unrecovered Wrong TDC MIN Number Sector Per Track EST
F762	Media: Unrecovered Self-Test Hard-Cache Test Fail
F763	Media: Unrecovered Self-Test OTF-Cache Fail
F764	Media: Unrecovered Merge G-List Failed - No P-List Exists
F765	Media: Unrecovered Wrong TDC MAX Number Sector Per SID
1768	Media: Recovered Key Seed ID Mismatch Error
F769	Media: Unrecovered Key Seed ID Mismatch Error

F76B	Media: Unrecovered No NRZ Clock Error
176C	Media: Recovered MEDC Correctable Error
F76D	Media: Unrecovered MEDC Uncorrectable Error
176E	Media: Correctable Channel Ready Error
F76F	Media: Uncorrectable Channel Ready Error
1770	Media: Recovered SID Timeout Error
F771	Media: Unrecovered SID Timeout Error
F772	Media: Unrecovered DASH starting timeout
F773	Media: Unrecovered ID table timeout
F774	Media: Unrecovered Servo timeout
F775	Media: Unrecovered Buffers timeout
F776	Media: Unrecovered DASH done timeout
F777	Media: Unrecovered DASH unknown timeout
F778	Media: DINIT2 timeout
F779	Media: Unrecovered Mini Mode Timeout
F77A	Media: BUFCNT Timeout Error
F77B	Media: Unrecovered Abort EOS fail
177C	Media: Recovered Servo Area Timeout
F77D	Media: Unrecovered Servo Area Timeout
F77E	Media: Write Error Recovery Timeout
F77F	Media: Read Error Recovery Timeout
1780	Media: Recovered DLC SID Delay Timeout
F781	Media: Unrecovered DLC SID Delay Timeout
1782	Media: Recovered Force Soft Error
F783	Media: Unrecovered Force Soft Error
1784	Media: Recovered Channel Sector Marginal Error
F785	Media: Unrecovered Channel Sector Marginal Error
1786	Media: Recovered LLI Underrun Error
F787	Media: Unrecovered LLI Underrun Error
178C	Media: Recovered FFSULI Timeout
F78D	Media: Unrecovered FFSULI Timeout
F78E	Media: Unrecovered SAT No Buffer Overflow With ECS Fault
F78F	Media: Unrecovered SAT Buffer Overflow With ECS Fault
F790	Media: Unrecovered SAT No Buffer Overflow Reset Media
F791	Media: Unrecovered SAT No Buffer Overflow Reset with ECS Fault
1792	Media: Recovered MEDC Write Data Not Ready Error
F793	Media: Unrecovered MEDC Write Data Not Ready error
1794	Media: Recovered DMA Timeout Error
F795	Media: Unrecovered DMA Timeout Error
F797	Media: SAT Write Abort
1798	Media: Recovered ID Not Found Error
F799	Media: Unrecovered ID Not Found Error
F79A	Media: Unrecovered HS Measure Target Mismatch
F79B	Media: Unrecovered Hard Clock Stop until the RDWTCLK is running again
179C	Media: Recovered Channel Read Timeout Error
F79D	Media: Unrecovered Channel Read Timeout Error
179E	Media: Recovered End Sector PHSN Error on READ
F79F	Media: Unrecovered End Sector PHSN Error on READ
F7A2	Media: Unrecovered Write Dcatch OCT Error
F7A6	Media: Unrecovered LBA ECC Last Data Read Error
F7A7	Media: Unrecovered Committed Write Hard Error
F7A8	Media: Unrecovered Committed Write Correction Disabled Error
F7A9	Media: Unrecovered Committed Write Uncorrectable Error
17AA	Media: Recovered Read Overrun Error
F7AB	Media: Unrecovered Read Overrun Error
17AE	Media: Recovered ECC Correctable Error
F7AF	Media: Unrecovered Sector Missing Error

F7B0	Media: Unrecovered Sector Overflow
17B1	Media: Recovered track ecc recovery
17B2	Media: Recovered Abort Window Error
F7B3	Media: Unrecovered Abort Window Error
17B4	Media: Recovered Shock Sensor Error
F7B5	Media: Unrecovered Shock Sensor Error
17B8	Media: Recovered Reference Tag Error
F7B9	Media: Unrecovered Reference Tag error
17BA	Media: Recovered Application Tag Error
F7BB	Media: Unrecovered Application Tag Error
F7BC	Media: Unrecovered T10 error
F7BD	Media: Unrecovered Guard Check Error
F7BE	Media: Multiple WRITE Error
F7BF	Media: Multiple READ Error
F7C1	Media: Unrecovered End Sector Check Error
F7C3	Media: Unrecovered Read CRC Error
17C4	Media: Recovered DRAM ECC Error
F7C5	Media: Unrecovered DRAM ECC Error
17C6	Media: Recovered DRAM ECC LBA Error
F7C7	Media: Unrecovered DRAM ECC LBA Error
17C8	Media: Recovered End Sector PHSN Error on WRITE
F7C9	Media: Unrecovered End Sector PHSN Error on WRITE
F7CA	Media: Unrecovered LBA Correction Disabled Error
17CB	Media: Recovered LBA Write Correctable Error
F7CC	Media: Unrecovered LBA Write Uncorrectable Error
F7CD	Media: Unrecovered LBA Encryption Error
F7CE	Media: Unrecovered Offline Already TAR Error
F7D0	Media: Unrecovered Pre-load Timeout Error
17D1	Media: Recovered DCHW Hang
F7D2	Media: Unrecovered DCHW Hang
F7D3	Media: Unrecovered SG Drive Error
17D4	Media: Recovered Parity PTR FIFO Error
F7D5	Media: Unrecovered Parity PTR FIFO Error
17D6	Media: Recovered Parity LBA FIFO Error
F7D7	Media: Unrecovered Parity LBA FIFO Error
17D8	Media: Recovered Parity Uncorrectable FIFO Error
F7D9	Media: Unrecovered Parity Uncorrectable FIFO Error
17DA	Media: Recovered Status Uncorrectable FIFO Error
F7DB	Media: Unrecovered Status Uncorrectable FIFO Error
17DC	Media: Recovered Parity EDC SRAM Error
F7DD	Media: Unrecovered Parity EDC SRAM Error
17DE	Media: Recovered REQ/ACK Handshake Error
F7DF	Media: Unrecovered REQ/ACK Handshake Error
17E0	Media: Recovered Write Splice Error
F7E1	Media: Unrecovered Write Splice Error
17E2	Media: Recovered Read Parity Error
F7E3	Media: Unrecovered Read Parity Error
17E4	Media: Recovered EPO Error
F7E5	Media: Unrecovered EPO Error
17E6	Media: Recovered NRZ Sector Marginal Error
F7E7	Media: Unrecovered NRZ Sector Marginal Error
17E8	Media: Recovered AE Access Inhibit Error
F7E9	Media: Unrecovered AE Access Inhibit Error
17EA	Media: Recovered PTR FIFO Error
F7EB	Media: Unrecovered PTR FIFO Error
17EC	Media: Recovered LBA FIFO Error
F7ED	Media: Unrecovered LBA FIFO Error

17EE	Media: Recovered Sector Number Cylinder Error
F7EF	Media: Unrecovered Sector Number Cylinder Error
17F0	Media: Recovered Read Transfer Length Error
F7F1	Media: Unrecovered Read Transfer Length Error
17F2	Media: Recovered DS RDC Burst Error
F7F3	Media: Unrecovered DS RDC Burst Error
17F4	Media: Recovered SV RDC Burst Error
F7F5	Media: Unrecovered SV RDC Burst Error
17F6	Media: Recovered Channel AE WG Error
F7F7	Media: Unrecovered Channel AE WG Error
17F8	Media: Recovered Dummy Error ERP MEAS
F7F9	Media: Unrecovered Dummy Error ERP MEAS
F813	CMD: Insufficient Buffer Space Error
F815	CMD: Aborted From Internal TMF Error
F816	CMD: Incompatible PRDS Version
F817	CMD: Ontime Helium leak aleart
F819	CMD: Unaligned Command Error
F81A	CMD: Param Not Support
F81B	CMD: Too Many Target Descriptors
F81C	CMD: Unsupported TARG DESC Type Code
F81D	CMD: Too Many Segment Descriptors
F81E	CMD: Reassign Not Allowed
F81F	CMD: Operation in Progress
F820	CMD: Unrecovered Parameter List Length Error
F821	CMD: Unrecovered Invalid Opcode in CDB Error
F822	CMD: Unrecovered LBA Out Of Range Error
F823	CMD: Unrecovered Invalid Field In CDB Error
F824	CMD: Unrecovered Invalid LUN Error
F825	CMD: Unrecovered Invalid Field In Parameter List Error
F826	CMD: Unrecovered Unsupported Log Page Error
F827	CMD: Unrecovered Access Denied Error
F828	CMD: Unrecovered Invalid Release of Persistent Reservation Error
F829	CMD: Invalid Tx Setting for Combo Chip Error
F830	CMD: Unrecovered Sequence Error
1831	CMD: Power Mode Idle_A By Timer
1832	CMD: Power Mode Idle_B By Timer
1833	CMD: Power Mode Idle_C By Timer
1834	CMD: Power Mode Standby_Z By Timer
1835	CMD: Power Mode Idle_A By Command
1836	CMD: Power Mode Idle_B By Command
1837	CMD: Power Mode Idle_C By Command
1838	CMD: Power Mode Standby_Z By Command
1839	CMD: Power Mode Standby_Y By Timer
183A	CMD: Power Mode Standby_Y By Command
F83B	CMD: Unable Rebuild Assist
F83C	CMD: CMD: Invalid Programmable Inquiry template size for EMC
F83D	CMD: Quiesce not allowed
F83F	CMD: NCQ Priority Error
F870	CMD: Unrecovered attempt to read invalid data
F873	CMD: Unrecovered write boundary violation
F874	CMD: Unrecovered helium leak write abort
F875	CMD: Unrecovered insufficient zone resource
F876	CMD: Unrecovered zone is read only
F877	CMD: Unrecovered zone is offline
F878	CMD: Unrecovered drive locked
F879	CMD: Unrecovered zone command not ready

F87A	CMD: Unrecovered unaligned write command
1A02	SMART: Temperature Warning (No Sense)
2A02	SMART: Temperature Warning (Recovered Sense)
3A02	SMART: Temperature Warning (Unit Attention)
1A03	SMART: Background Self-Test Failure (No Sense)
2A03	SMART: Background Self-Test Failure (Recovered Sense)
3A03	SMART: Background Self-Test Failure (Unit Attention)
1A04	SMART: Background Pre-Scan Failure (No Sense)
2A04	SMART: Background Pre-Scan Failure (Recovered Sense)
3A04	SMART: Background Pre-Scan Failure (Unit Attention)
1A05	SMART: Background Media Scan Failure (No Sense)
2A05	SMART: Background Media Scan Failure (Recovered Sense)
3A05	SMART: Background Media Scan Failure (Unit Attention)
1A14	SMART: Spare Sector Availability Warning (No Sense)
2A14	SMART: Spare Sector Availability Warning (Recovered Sense)
3A14	SMART: Spare Sector Availability Warning (Unit Attention)
1A21	SMART: Milli-Actuator Error (No Sense)
2A21	SMART: Milli-Actuator Error (Recovered Sense)
3A21	SMART: Milli-Actuator Error (Unit Attention)
1A22	SMART: Extreme Over-Temperature Warning (No Sense)
2A22	SMART: Extreme Over-Temperature Warning (Recovered Sense)
3A22	SMART: Extreme Over-Temperature Warning (Unit Attention)
1A32	SMART: Read Error Rate Warning (No Sense)
2A32	SMART: Read Error Rate Warning (Recovered Sense)
3A32	SMART: Read Error Rate Warning (Unit Attention)
1A43	SMART: Seek Error Rate Warning (No Sense)
2A43	SMART: Seek Error Rate Warning (Recovered Sense)
3A43	SMART: Seek Error Rate Warning (Unit Attention)
1A4A	SMART: Write Error Rate Warning (No Sense)
2A4A	SMART: Write Error Rate Warning (Recovered Sense)
3A4A	SMART: Write Error Rate Warning (Unit Attention)
1A50	SMART: Start/Stop Load/Unload Cycle Count Warning (No Sense)
2A50	SMART: Start/Stop Load/Unload Cycle Count Warning (Recovered Sense)
3A50	SMART: Start/Stop Load/Unload Cycle Count Warning (Unit Attention)
1A56	SMART: Spinup Time Warning (No Sense)
2A56	SMART: Spinup Time Warning (Recovered Sense)
3A56	SMART: Spinup Time Warning (Unit Attention)
1A5B	SMART: Spinup Retry Count Warning (No Sense)
2A5B	SMART: Spinup Retry Count Warning (Recovered Sense)
3A5B	SMART: Spinup Retry Count Warning (Unit Attention)
FA81	Self-Test: Unrecoverable Error Count Threshold Exceeded
2A83	Self-Test: GLIST Error Count Threshold Reached
1A85	Self-Test: Recovery Error
2A85	Self-Test: Servo Error
4A85	Self-Test: Command Timeout Error
FA85	Self-Test: Unrecoverable Error
FA8D	SMART: Disk shift exceeded threshold
1AFD	SMART: Internal Environment Status Error(No Sense)
2AFD	SMART: Internal Environment Status Error(Recovered Sense)
3AFD	SMART: Internal Environment Status Error(Unit Attention)
1AFF	SMART: Test Warning Threshold Reached (No Sense)
2AFF	SMART: Test Warning Threshold Reached (Recovered Sense)
3AFF	SMART: Test Warning Threshold Reached (Unit Attention)
FCxx	Media: Unrecovered Unable to Read RID or FID Number xx

1EC0	Media: Recovered R/W Abort Due to SSW Calibration Track
FEC1	Media: Unrecovered R/W Abort Due to SSW Calibration Track
1EC2	Media: Recovered R/W Abort Due to RAW TID
FEC3	Media: Unrecovered R/W Abort Due to RAW TID
1EC4	Media: Recovered R/W Abort Due to Burst In Progress
FEC5	Media: Unrecovered R/W Abort Due to Burst In Progress
1EC6	Media: Recovered R/W Abort Due to DSW Not Settled
FEC7	Media: Unrecovered R/W Abort Due to DSW Not Settled
1EC8	Media: Recovered R/W Abort Due to Preheat
FEC9	Media: Unrecovered R/W Abort Due to Preheat
1ECA	Media: Recovered R/W Abort Due to HMA R/W Offset
FECB	Media: Unrecovered R/W Abort Due to HMA R/W Offset
1ECC	Media: Recovered R/W Abort Due to WCSBUSY Pro Check
FECD	Media: Unrecovered R/W Abort Due to WCSBUSY Pro Check
1ECE	Media: Recovered R/W Abort Due to Vibration Condition (Other)
FECF	Media: Unrecovered R/W Abort Due to Vibration Condition (Other)
1ED0	Media: Recovered R/W Abort Due to Vibration Condition (Estimator)
FED1	Media: Unrecovered R/W Abort Due to Vibration Condition (Estimator)
1ED2	Media: Recovered R/W Abort Due to Vibration Condition (Predictor)
FED3	Media: Unrecovered R/W Abort Due to Vibration Condition (Predictor)
1ED4	Media: Recovered R/W Abort Due to Vibration Condition (PES Error)
FED5	Media: Unrecovered R/W Abort Due to Vibration Condition (PES Error)
1ED6	Media: Recovered R/W Abort Off Track Write Error
FED7	Media: Unrecovered R/W Abort Off Track Write Error
1ED8	Media: Recovered R/W Abort RRO Field Misread Error
FED9	Media: Unrecovered R/W Abort RRO Field Misread Error
1EDA	Media: Recovered R/W Abort RRO Field Missing Error
FEDB	Media: Unrecovered R/W Abort RRO Field Missing Error
1EDC	Media: Recovered R/W Abort Idle Seek Error
FEDD	Media: Unrecovered R/W Abort Idle Seek Error
1EDE	Media: Recovered R/W Abort Seek Timeout Error
FEDF	Media: Unrecovered R/W Abort Seek Timeout Error
1EE0	Media: Recovered R/W Abort Estimator Error
FEE1	Media: Unrecovered R/W Abort Estimator Error
1EE2	Media: Recovered R/W Abort Predictor Error
FEE3	Media: Unrecovered R/W Abort Predictor Error
1EE4	Media: Recovered R/W Abort PES Error
FEE5	Media: Unrecovered R/W Abort PES Error
1EE6	Media: Recovered R/W Abort RPC Resync Error
FEE7	Media: Unrecovered R/W Abort RPC Resync Error
1EE8	Media: Recovered R/W Abort PES Reset Error
FEE9	Media: Unrecovered R/W Abort PES Reset Error
1EEA	Media: Recovered R/W Abort SID Unlock Error
FEEB	Media: Unrecovered R/W Abort SID Unlock Error
1EEC	Media: Recovered R/W Abort WCS Error
FEED	Media: Unrecovered R/W Abort WCS Error
1EEE	Media: Recovered R/W Abort Hard Reset Error
FEEF	Media: Unrecovered R/W Abort Hard Reset Error
1EF0	Media: Recovered R/W Abort Shock Error
FEF1	Media: Unrecovered R/W Abort Shock Error
1EF2	Media: Recovered R/W Abort Unlock Macro Error
FEF3	Media: Unrecovered R/W Abort Unlock Macro Error
1EF4	Media: Recovered R/W Abort Sharp Error
FEF5	Media: Unrecovered R/W Abort Sharp Error
1EF6	Media: Recovered R/W Abort Aggressive Error
FEF7	Media: Unrecovered R/W Abort Aggressive Error
1EF8	Media: Recovered R/W Abort VWI Limit Error

FEF9	Media: Unrecovered R/W Abort VWI Limit Error
1EFA	Media: Recovered R/W Abort Gray Code Error
FEFB	Media: Unrecovered R/W Abort Gray Code Error
1EFC	Media: Recovered R/W Abort Linger Error
FEFD	Media: Unrecovered R/W Abort Linger Error
1EFE	Media: Recovered R/W Abort No STM Error
FEFF	Media: Unrecovered R/W Abort No STM Error
FF01	IndSys: Drive Not Loaded
FF02	IndSys: Drive Not Loaded - Format Invalid
FF03	IndSys: Indirection System Not Online
FF04	IndSys: Drive Not Loaded - Old Version Mismatch
FF05	IndSys: Drive Not Loaded - Heap Pointer Mismatch
FF06	IndSys: Drive Not Loaded - Heap size Mismatch
FF07	IndSys: Drive Not Loaded - Rid Heap Size Mismatch
FF08	IndSys: Drive Not Loaded - Heap Version Mismatch
FF09	IndSys: Drive Not Loaded - Incompatible Rid
FF0A	IndSys: Drive Not Loaded - Corrupt Rid
FF0B	IndSys: Drive Not Loaded - Rid Num Objects Mismatch
FF0C	IndSys: Drive Not Loaded - Rid Version Mismatch
FF0D	IndMgr: Drive Not Loaded - Rid Version Mismatch
FF0E	IndSys: Drive Not Loaded - Layout Rid Version Mismatch
FF0F	IndSys: Drive Not Loaded - W2C Rid Version Mismatch
FF10	IndSys: Drive Not Loaded - Layout Manager Restore Failed
FF11	IndSys: Drive Not Loaded - W2C Manager Restore Failed
FF12	IndSys: Drive Not Loaded - Layout Failed
FF13	IndSys: Drive Not Loaded - DMM Format Failed
FF14	IndSys: Drive Not Loaded - IM Format Failed
FF15	IndSys: Drive Not Loaded - Pseudo Write Failed
FF16	IndSys: Drive Not Loaded - Full drop Failed
FF17	IndSys: Drive Not Loaded - EPO Format Failed
FF18	IndSys: Drive Not Loaded - Set IM Valid Failed
FF19	IndSys: Drive Not Loaded - Bring Online failed
FF1A	IndSys: Drive Not Loaded - Metadata First Primary
FF1B	IndSys: Drive Loaded - Metadata First Primary and Secondary
FF1C	IndSys: Drive Loaded - IBA Out of Range
FF1E	IndSys: Drive Loaded - Context Sequence ID Mismatch
FF20	IndSys: Drive Not Loaded - EPD Flash Entry Invalid
FF21	LayoutMgr: All Flash Entries Erased
FF22	IndSys: Drive Loaded - Replay Failed
FF23	Out of Order EPO SRAM Copy Object
FF24	ShowStop During EPO
FF25	Error While Loading Object
FF26	Missing NVC SPEC
FF27	Showstop during EPO replay
FF28	IndSys: Full context drop write overflow
FF29	IndSys: Interruptible full context drop not started
FF2A	EPD num EPO pages exceeded
FF2B	IndSys: IFCD repopulate invalid spec
FF41	LayoutMgr: Format Capacity Not Met
FF43	IndSys: Drive Not Loaded - Metadata ATI
FF44	IndSys: Drive Loaded - Replay Fail
FF45	Format Too Many Regions
FF46	Format No Tracks in Region
FF47	Format Not Enough Tracks For Spares
FF48	Format Too Many Data Tracks
FF50	IndMgr: IM Demand Split Too Deep Failure

FF51	IndMgr: Allocate Failed Delta Group
FF52	IndMgr: Allocate Failed Split Spec
FF53	IndMgr: Allocate Failed Split Delta
FF54	IndMgr: Allocate Failed Unsplit Delta Group
FF55	IndMgr: Generic Insert Exception Failed
FF56	IndMgr: Commit write lba out of range
FF57	IndMgr: Format insuffient heap size
FF60	EpoMgr: Flash Read RS Syndrome Gen Timeout
FF61	EpoMgr: Uncorrectable Flash RS ECC Error
FF62	EpoMgr: Correctable EPO Timeout
FF63	EpoMgr: ARM FPS Engine and Not Spinning
FF66	EpoMgr: Flash Header Not Pre Erased
FF67	EpoMgr: Flash Data Not Pre Erased
FF68	EpoMgr: Flash Header Not Written
FF70	NVC Not Loaded
FF71	NVC Command Spec Too Large
FF72	ESL Command Spec Mismatch
FF73	NVC Non Meta Data Error